Memory Modules
User Guide

© Copyright 2009 Hewlett-Packard Development Company, L.P.

The information contained herein is subject to change without notice. The only warranties for HP products and services are set forth in the express warranty statements accompanying such products and services. Nothing herein should be construed as constituting an additional warranty. HP shall not be liable for technical or editorial errors or omissions contained herein.

First Edition: June 2009

Document Part Number: 532128-001

Product notice

This user guide describes features that are common to most models. Some features may not be available on your computer.

Table of contents

1 Adding or replacing memory modules

2 Increasing hard drive space for the Hibernation file

Index 5

1 Adding or replacing memory modules

The computer has one memory module compartment, which is located on the bottom of the computer. The memory capacity of the computer can be upgraded by replacing one of the memory modules in the memory module slot.

⚠ **WARNING!** To reduce the risk of electric shock and damage to the equipment, unplug the power cord and remove all batteries before installing a memory module.

△ **CAUTION:** Electrostatic discharge (ESD) can damage electronic components. Before beginning any procedure, touch a grounded metal object to be sure that you are discharged of static electricity.

To add or replace a memory module:

1. Save your work.
2. Shut down the computer and close the display.

   If you are not sure whether the computer is off or in Hibernation, turn the computer on by pressing the power button. Then shut down the computer through the operating system.
3. Disconnect all external devices connected to the computer.
4. Unplug the power cord from the AC outlet.
5. Turn the computer upside down on a flat surface.
6. Remove the battery from the computer.
7. Loosen the memory module compartment cover screws **(1)**.

8. Lift the memory module compartment cover **(2)** away from the computer.

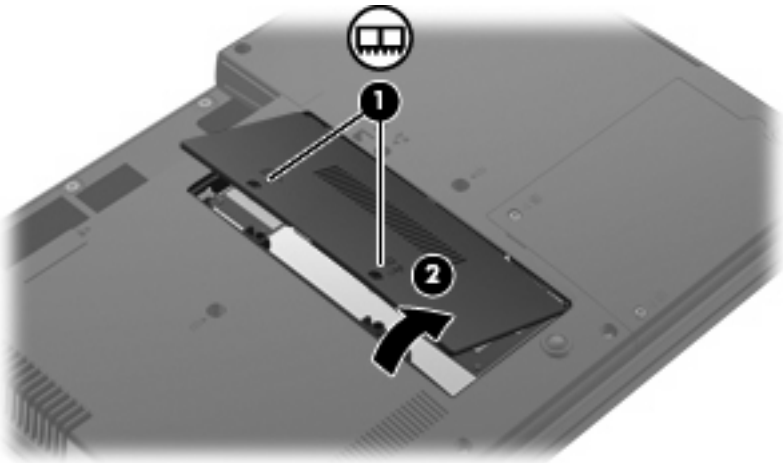

9. Remove the memory module:

   a. Pull away the retention clips **(1)** on each side of the memory module.

      The memory module tilts up.

   △ **CAUTION:** To prevent damage to the memory module, hold the memory module by the edges only. Do not touch the components on the memory module.

   b. Grasp the edge of the memory module **(2)**, and gently pull the module out of the memory module slot.

      To protect a memory module after removal, place it in an electrostatic-safe container.

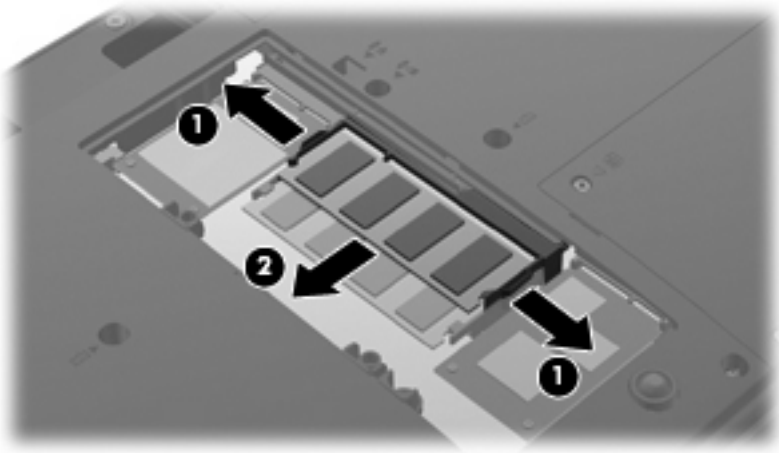

10. Insert a memory module:

   a. Align the notched edge **(1)** of the memory module with the tab in the memory module slot.

   △ **CAUTION:** To prevent damage to the memory module, hold the memory module by the edges only. Do not touch the components on the memory module, and do not bend the memory module.

   b. With the memory module at a 45-degree angle from the surface of the memory module compartment, press the module **(2)** into the memory module slot until it is seated.

c. Gently press the memory module **(3)** down, applying pressure to both the left and right edges of the memory module, until the retention clips snap into place.

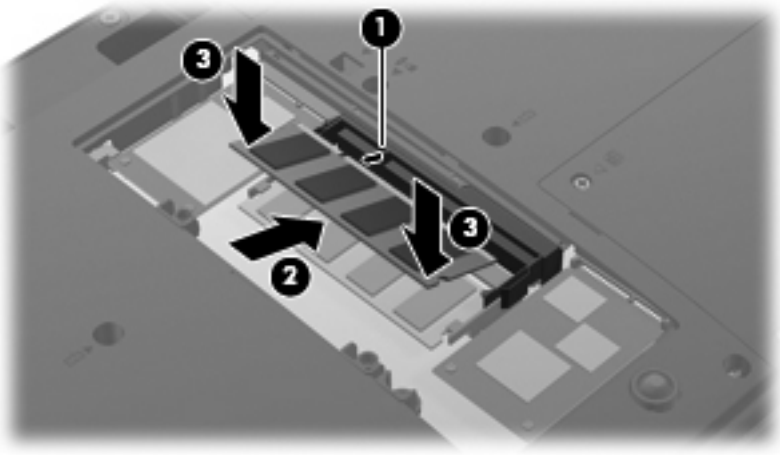

11. Align the tabs **(1)** on the memory module compartment cover with the notches on the computer.
12. Close the cover **(2)**.
13. Tighten the memory module compartment cover screws **(3)**.

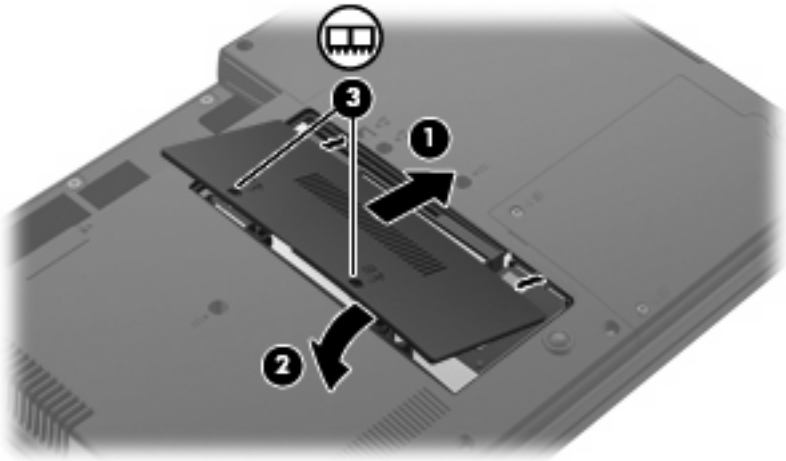

14. Replace the battery.
15. Turn the computer right-side up, and then reconnect external power and external devices.
16. Turn on the computer.

2 Increasing hard drive space for the Hibernation file

When Hibernation is initiated, the operating system stores your information to a Hibernation file on the hard drive and then turns off the computer. The operating system reserves space on the hard drive to store the Hibernation file based on the amount of system memory. When you increase the memory, the operating system increases the hard drive space reserved for the Hibernation file.

If you experience problems with Hibernation after increasing memory, be sure that the amount of free space on the hard drive is larger than the space required by the Hibernation file.

To display the amount of free space on the primary hard drive:

1. Select **Start > My Computer**.
2. Right-click the primary hard drive listing, and then click **Properties**.

▲ To display the amount of hard drive space required by the Hibernation file, select **Start > Control Panel > Performance and Maintenance > Power Options > Hibernate** tab.

If the free space on the hard drive is less than the space required by the Hibernation file, increase the amount of free space on the hard drive:

▲ Select **Start > Help and Support > Performance and Maintenance > Freeing up disk space** and follow the on-screen instructions.

Index

H
hard disk drive space 4
hard drive space 4
Hibernation 4
Hibernation file 4

M
memory
  increasing 4
memory module
  adding 1
  removing 2
  replacing 1
memory module compartment
  cover
  removing 2
  replacing 3
memory, replacing memory
  modules 1