# Compaq Presario CQ32 Notebook PC
# HP G32 Notebook PC

## Maintenance and Service Guide

© Copyright 2010 Hewlett-Packard Development Company, L.P.

Microsoft and Windows are U.S. registered trademarks of Microsoft Corporation. Bluetooth is a trademark owned by its proprietor and used by Hewlett-Packard Company under license. SD Logo is a trademark of its proprietor.

Bluetooth is a trademark owned by its proprietor and used by Hewlett-Packard Company under license. Intel and Core are trademarks or registered trademarks of Intel Corporation in the United States and other countries. Microsoft and Windows are either trademarks or registered trademarks of Microsoft Corporation in the United States and/or other countries. SD Logo is a trademark of its proprietor.

The information contained herein is subject to change without notice. The only warranties for HP products and services are set forth in the express warranty statements accompanying such products and services. Nothing herein should be construed as constituting an additional warranty. HP shall not be liable for technical or editorial errors or omissions contained herein.

First Edition: April 2010

Document Part Number: 610542-001

# MSG revision history

| Revision | Publication date | Description |
|---|---|---|
| A | July 2010 | • Added HP branding and updated commodities in the following location: Product description on page 1<br>• Added a newly supported Rubber feet kit to spare parts listings in the following locations: Computer major components on page 17, Sequential part number listing on page 29, and Computer feet on page 40<br>• Added a newly supported WLAN module to spare parts listings in the following locations: Computer major components on page 17, Sequential part number listing on page 29, and WLAN module on page 46<br>• Added a newly supported USB board to spare parts listings in the following locations: Computer major components on page 17, Sequential part number listing on page 29, and USB board on page 61<br>• Added a newly supported power connector cable to spare parts listings in the following locations: Computer major components on page 17, Sequential part number listing on page 29, and Power connector cable on page 67<br>• Added a newly supported system board to spare parts listings in the following locations: Computer major components on page 17, Sequential part number listing on page 29, and System board on page 79<br>• Added newly supported processors to spare parts listings in the following locations: Computer major components on page 17, Sequential part number listing on page 29, and Processor on page 84 |
| B | November 2010 | • Added newly supported hard drives to spare parts listings in the following locations: Computer major components on page 17, Mass storage devices on page 27, Sequential part number listing on page 29, and Hard drive on page 51<br>• Added newly supported processors to spare parts listings in the following locations: Computer major components on page 17, Sequential part number listing on page 29, and Processor on page 84<br>• Added newly supported system boards to spare parts listings in the following locations: Computer major components on page 17, Sequential part number listing on page 29, and System board on page 79 |

## Safety warning notice

⚠ **WARNING!** To reduce the possibility of heat-related injuries or of overheating the computer, do not place the computer directly on your lap or obstruct the computer air vents. Use the computer only on a hard, flat surface. Do not allow another hard surface, such as an adjoining optional printer, or a soft surface, such as pillows or rugs or clothing, to block airflow. Also, do not allow the AC adapter to contact the skin or a soft surface, such as pillows or rugs or clothing, during operation. The computer and the AC adapter comply with the user-accessible surface temperature limits defined by the International Standard for Safety of Information Technology Equipment (IEC 60950).

# Table of contents

**1 Product description ..... 1**

**2 External component identification ..... 5**

Identifying hardware ..... 5
Top components ..... 6
TouchPad ..... 6
Lights ..... 7
Button and speakers ..... 8
Keys ..... 9
Display ..... 10
Front component ..... 11
Right-side components ..... 11
Left-side components ..... 12
Rear component ..... 13
Bottom components ..... 13
Wireless antennas ..... 14
Additional hardware components ..... 15

**3 Illustrated parts catalog ..... 16**

Serial number location ..... 16
Computer major components ..... 17
Display assembly components ..... 25
Plastics Kit ..... 26
Mass storage devices ..... 27
Miscellaneous parts ..... 28
Sequential part number listing ..... 29

**4 Removal and replacement procedures ..... 34**

Preliminary replacement requirements ..... 34
Tools required ..... 34
Service considerations ..... 34
Plastic parts ..... 34
Cables and connectors ..... 35

Drive handling ..... 35
Grounding guidelines ..... 36
Electrostatic discharge damage ..... 36
Packaging and transporting guidelines ..... 37
Workstation guidelines ..... 37
Equipment guidelines ..... 38
Component replacement procedures ..... 39
Serial number ..... 39
Computer feet ..... 40
Battery ..... 41
Memory module ..... 42
RTC battery ..... 45
WLAN module ..... 46
Hard drive ..... 51
Optical drive ..... 54
Top cover ..... 55
Keyboard ..... 59
USB board ..... 61
Speaker assembly ..... 63
Bluetooth module ..... 65
Power connector cable ..... 67
Optical drive connector ..... 69
Power button board ..... 71
Display assembly ..... 73
System board ..... 79
Fan/heat sink assembly ..... 81
Processor ..... 84

**5 Setup Utility (BIOS) ..... 86**
Starting Setup Utility ..... 86
Using Setup Utility ..... 87
Changing the language of Setup Utility ..... 87
Navigating and selecting in Setup Utility ..... 87
Displaying system information ..... 88
Restoring default settings in Setup Utility ..... 88
Exiting Setup Utility ..... 89
Setup Utility menus ..... 89
Main menu ..... 89
Security menu ..... 89
System Configuration menu ..... 90
Diagnostics menu ..... 91

**6 Specifications ..... 92**
Computer specifications ..... 92
33.78-cm (13.3-in) display specifications ..... 93
Hard drive specifications ..... 94
DVD±RW SuperMulti DL Drive with LightScribe specifications ..... 95
Blu-ray ROM with LightScribe DVD±R/RW SuperMulti DL Drive ..... 96
System resource specifications ..... 97

**7 Backup and recovery ..... 98**
Creating recovery discs ..... 99
Backing up your information ..... 100
Using Windows Backup and Restore ..... 101
Using system restore points ..... 101
When to create restore points ..... 101
Create a system restore point ..... 101
Restore to a previous date and time ..... 102
Performing a recovery ..... 102
Recovering from the recovery discs ..... 102
Recovering from the dedicated recovery partition (select models only) ..... 103

**8 Connector pin assignments ..... 104**
Audio-out (headphone) ..... 104
Audio-in (microphone) ..... 104
External monitor ..... 105
RJ-45 (network) ..... 106
Universal Serial Bus ..... 106
HDMI ..... 107

**9 Power cord set requirements ..... 108**
Requirements for all countries or regions ..... 108
Requirements for specific countries or regions ..... 109

**10 Recycling ..... 110**
Battery ..... 110
Display ..... 110

**Index ..... 116**

# 1 Product description

| Category | Description | Compaq Presario CQ32 | HP G32 |
|---|---|---|---|
| **Product Name** | **Compaq Presario CQ32 Notebook PC** | √ | |
| | **HP G32 Notebook PC** | | √ |
| **Processors** | **Intel® Core™ i5** | | |
| | 580M, 2.66-GHz, SC turbo, 3-MB L3 cache | √ | √ |
| | 560M, 2.66-GHz, SC turbo, 3-MB L3 cache | √ | √ |
| | 540M, 2.53-GHz, SC turbo, 3-MB L3 cache | √ | √ |
| | 520M, 2.40-GHz, SC turbo, 3-MB L3 cache | √ | √ |
| | 480M, 2.66-GHz, SC turbo, 3-MB L3 cache | √ | √ |
| | 460M, 2.53-GHz, SC turbo, 3-MB L3 cache | √ | √ |
| | 450M 2.40-GHz, SC turbo, 3-MB L3 cache | √ | √ |
| | 430M 2.26-GHz, SC turbo, 3-MB L3 cache | √ | √ |
| | **Intel Core i3** | | |
| | 390M, 2.66-GHz, 3-MB, L3 cache | √ | √ |
| | 380M, 2.53-GHz, 3-MB L3 cache | √ | √ |
| | 370M, 2.40-GHz, 3-MB L3 cache | √ | √ |
| | 350M, 2.26-GHz, 3-MB L3 cache | √ | √ |
| | **Intel Pentium®** | | |
| | P6300, 2.26-GHz, 3-MB, L3 cache | √ | √ |
| | P6200, 2.13-GHz, 3-MB L3 cache | √ | √ |
| | P6100, 2.0-GHz, 3-MB L3 cache | √ | √ |
| | P6000, 1.86-GHz, 3-MB L3 cache | √ | √ |
| **Chipset** | Intel HM55 Express | √ | √ |

| Category | Description | Compaq Presario CQ32 | HP G32 |
|---|---|---|---|
| **Graphics** | **Discrete graphics**<br><br>ATI Mobility Radeon™ HD6370 with 1024-MB of dedicated video memory 128-MB×16 DDR3, 800-MHz) | √ | √ |
| | Support for BD and/or HD-DVD playback with HD Decode, and DX11 Support | √ | √ |
| **Panel** | **33.78-cm** (13.3-in) HD LED BrightView (1366 × 768 HD) (5.2 mm) SVA | √ | √ |
| | 16:9 ultra wide aspect ratio | √ | √ |
| **Memory** | 2 SODIMM slots | √ | √ |
| | Customer-accessible and upgradable | √ | √ |
| | Supports up to 8 GB of system memory | √ | √ |
| | DDR3, 1066-MHz, dual-channel memory (DDR3 1333 MHz downgraded to DDR3 1066 MHz) | √ | √ |
| | Supports the following configurations: | | |
| | • 4 GB (2 GB×2) | √ | √ |
| | • 4 GB (4 GB×1) | √ | √ |
| | • 3 GB (1 GB×1 + 2 GB×1) | √ | √ |
| | • 2 GB (1 GB×1) | √ | √ |
| | • 2 GB (1 GB×2) | √ | √ |
| | • 1 GB (1 GB×1) | √ | √ |
| **Hard drives** | Supports the following **9.5-mm**, **6.35-cm** (2.5-in) SATA hard drives | | |
| | • 640-GB, 5400 rpm | √ | √ |
| | • 500 GB, 7200 & 5400 rpm | √ | √ |
| | • 320 GB, 7200 & 5400 rpm | √ | √ |
| | • 250 GB, 7200 rpm | √ | √ |
| | • 160 GB, 7200 rpm | √ | √ |
| **Optical drives** | Supports the following **12.7-mm** (0.50-in) tray load, fixed, SATA drive: | | |
| | Blu-ray ROM with LightScribe DVD±R/RW SuperMulti DL Drive | √ | √ |
| | Blu-ray ROM DVD±R/RW SuperMulti DL Drive | √ | √ |
| | DVD±R/RW SuperMulti DL Drive with LightScribe | √ | √ |
| | DVD±R/RW SuperMulti DL Drive | √ | √ |

| Category | Description | Compaq Presario CQ32 | HP G32 |
|---|---|---|---|
| **Camera** | Low cost VGA camera | √ | √ |
| | Fixed (no tilt), activity LED | √ | √ |
| | 640 × 480 by 24 frames per second | √ | √ |
| **Microphone** | One microphone, digital | √ | √ |
| | Noise suppression, echo cancellation | √ | √ |
| **Audio** | HD audio | √ | √ |
| | Supports Microsoft Premium requirements | √ | √ |
| | Two Altec Lansing speakers | √ | √ |
| **Ethernet** | Integrated 10/100 network interface card (NIC) | √ | √ |
| **Wireless** | **Integrated wireless local area network (WLAN) options by way of wireless module:** | √ | √ |
| | Intel Centrino Wireless-N 1000 b/g/n with 2 antennas | √ | √ |
| | Atheros 54g wireless 802.11 b/g/n with 2 antennas | √ | √ |
| | Broadcom 802.11b/g/n with 2 antennas | √ | √ |
| | Broadcom 802.11b/g/n 1x1 WiFi + 2070 Bluetooth combo half-minicard module with 2 antennas | √ | √ |
| | Realtek 802.11b/g/n with 2 antennas | √ | √ |
| | Realtek 802.11b/g/n 1x1 + Bluetooth with 2 antennas | √ | √ |
| **External media card** | 5-in-1 Digital Media Slot; supports SD, MMC, MS, Mspro, xD | √ | √ |
| | Supports mini versions of SD, MMC, and MS Duo with adapter (adapter not included) | √ | √ |
| **Ports** | VGA (Dsub 15-pin) supporting 1600 x 1200 resolution at 75 Hz | √ | √ |
| | Disabled when connected to devices through expansion port 3 | √ | √ |
| | Hot plug/unplug and auto detect for wide-aspect or standard-aspect video | √ | √ |
| | HDMI v1.3 supporting up to 1080p, 1920 x 1200 @ 60 Hz DVI mode | √ | √ |
| | USB 2.0 (3) | √ | √ |
| | RJ-45 | √ | √ |

| Category | Description | Compaq Presario CQ32 | HP G32 |
|---|---|---|---|
| | Audio-in (microphone) | √ | √ |
| | Audio-out (headphone) | √ | √ |
| | Smart-pin AC adapter plug | √ | √ |
| **Keyboard/pointing devices** | **33.78-cm** (13.3-inch) black textured pocket keyboard | √ | √ |
| | TouchPad supports two-way scroll with legend | √ | √ |
| | Taps enabled by default | √ | √ |
| **Power requirements** | 6-cell (55-Wh) 2.55-Ah Li-ion battery | √ | √ |
| | 6-cell (47-Wh) 2.2-Ah Li-ion battery | √ | √ |
| | 1 meter power cord | √ | √ |
| | 65-W AC adapter with Smart-Pin DC connector | √ | √ |
| | 90-W AC adapter with Smart-Pin DC connector | √ | √ |
| **Security** | Kensington Security Lock | √ | √ |
| **Operating system** | **Preinstalled:** | | |
| | Windows 7 Home Basic (32 bit) | √ | √ |
| | FreeDOS | √ | √ |
| **Serviceability** | **End-user replaceable parts:** | | |
| | AC adapter | √ | √ |
| | Battery (system) | √ | √ |
| | Hard drive | √ | √ |
| | Memory module | √ | √ |
| | Optical drive | √ | √ |
| | Mini-card device | √ | √ |

# 2 External component identification

## Identifying hardware

To see a list of hardware installed in the computer, follow these steps:

▲ Select **Start > Control Panel > System and Security**. Then, in the **System** area, click **Device Manager**.

You can also add hardware or modify device configurations using Device Manager.

**NOTE:** Windows® includes the User Account Control feature to improve the security of your computer. You may be prompted for your permission or password for tasks such as installing software, running utilities, or changing Windows settings. Refer to Help and Support for more information.

# Top components

## TouchPad

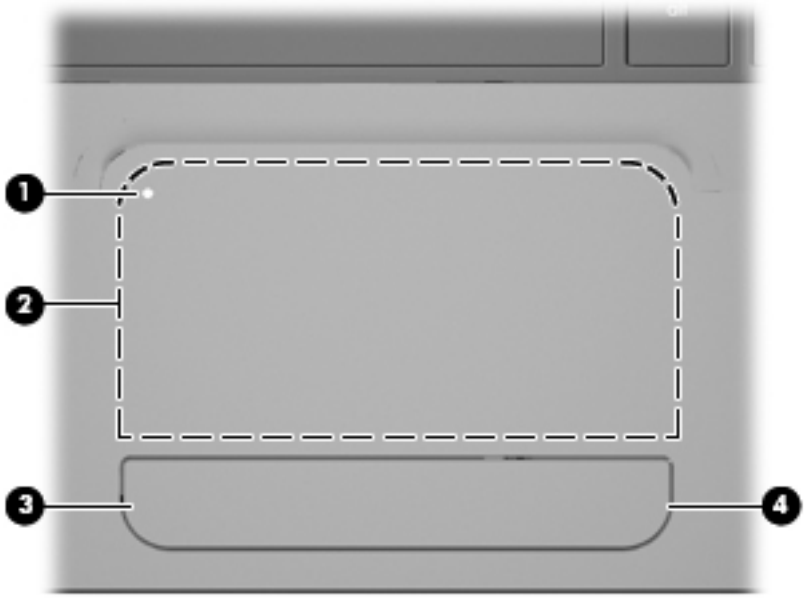


| Component | | Description |
|---|---|---|
| **(1)** | TouchPad on/off indicator | To turn the TouchPad on and off, quickly double-tap the TouchPad on/off indicator.<br>**NOTE:** When the TouchPad is enabled, the light is off. |
| **(2)** | TouchPad zone* | Moves the pointer and selects or activates items on the screen. |
| **(3)** | Left TouchPad button* | Functions like the left button on an external mouse. |
| **(4)** | Right TouchPad button* | Functions like the right button on an external mouse. |

*This table describes factory settings. To view or change pointing device preferences, select **Start > Devices and Printers**. Then, right-click the icon representing your device, and select **Mouse settings**.

There is an unmarked scroll zone inside the right edge of the TouchPad. To scroll up and down using the TouchPad vertical scroll zone, slide your finger up or down inside the right edge of the TouchPad. For more information about TouchPad features, refer to "Using the TouchPad" section later in this guide.

## Lights

| Component | | Description |
|---|---|---|
| **(1)** | TouchPad light | • Amber: The TouchPad is disabled.<br>• Off: The TouchPad is enabled. |
| **(2)** | Caps lock light | On: Caps lock is on. |
| **(3)** | Power light | • On: The computer is on.<br>• Blinking: The computer is in the Sleep state.<br>• Off: The computer is off or in Hibernation. |
| **(4)** | Wireless light | • White: An integrated wireless device, such as a wireless local area network (WLAN) device and/or a Bluetooth® device, is on.<br>• Amber: All wireless devices are off. |

## Button and speakers

| Component | | Description |
|---|---|---|
| **(1)** | Speakers (2) | Produce sound. |
| **(2)** | Power button | • When the computer is off, press the button to turn on the computer.<br>• When the computer is on, press the button briefly to initiate Sleep.<br>• When the computer is in the Sleep state, briefly press the button to exit Sleep.<br>• When the computer is in Hibernation, briefly press the button to exit Hibernation.<br>If the computer has stopped responding and Windows shutdown procedures are ineffective, press and hold the power button for at least 5 seconds to turn off the computer.<br>To learn more about your power settings, select **Start > Control Panel > System and Security > Power Options**. |

## Keys

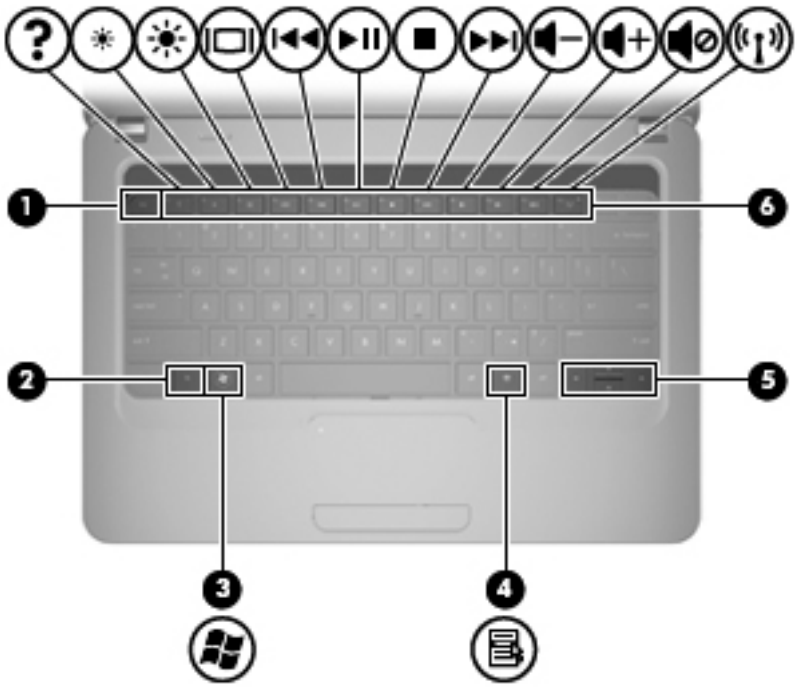

| Component | | Description |
|---|---|---|
| **(1)** | esc key | Displays system information when pressed in combination with the fn key. |
| **(2)** | fn key | • Displays system information when pressed in combination with the esc key.<br>• Press in combination with an Up, Down, Left, or Right arrow key to navigate a page or document. |
| **(3)** | Windows logo key | Displays the Windows Start menu. |
| **(4)** | Windows applications key | Displays a shortcut menu for items beneath the pointer. |
| **(5)** | Navigation keys | Navigate using the Up, Down, Left, and Right arrow keys. |
| **(6)** | Action keys | Execute frequently used system actions. |

## Display

| Component | | Description |
|---|---|---|
| **(1)** | Internal microphone | Records sound. |
| **(2)** | Integrated webcam | Records video and captures still photographs. |
| **(3)** | Integrated webcam light | On: The integrated webcam is in use. |

# Front component

| Component | Description |
|---|---|
| Digital Media Slot | Supports the following optional digital card formats:<br>• Memory Stick (MS)<br>• Memory Stick Pro (MSP)<br>• MultiMediaCard (MMC)<br>• Secure Digital (SD) Memory Card<br>• xD-Picture Card (XD) |

# Right-side components

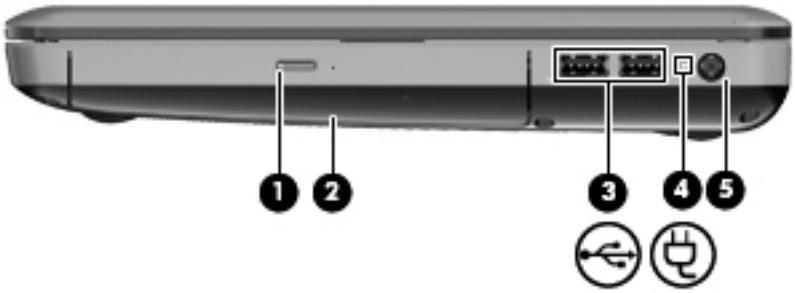


| Component | Description |
|---|---|
| **(1)** Optical drive light | Blinking: The optical drive is being accessed. |
| **(2)** Optical drive | Reads and writes to optical discs. |
| **(3)** USB ports (2) | Connect optional USB devices. |
| **(4)** AC adapter/battery charging light | • White: The computer is connected to external power and the battery is fully charged.<br>• Blinking white: The computer is in the Sleep state.<br>• Amber: A battery is charging.<br>• Off: The computer is not connected to external power. |
| **(5)** Power connector | Connects an AC adapter. |

# Left-side components

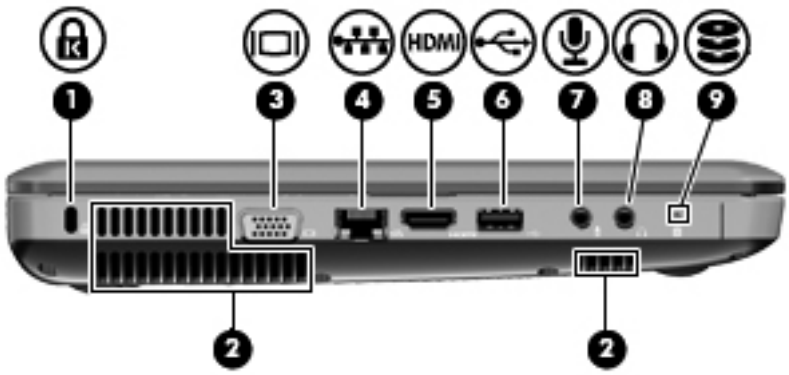


| Component | | Description |
|---|---|---|
| **(1)** | Security cable slot | Attaches an optional security cable to the computer.<br>**NOTE:** The security cable is designed to act as a deterrent, but it may not prevent the computer from being mishandled or stolen. |
| **(2)** | Vent | Enables airflow to cool internal components.<br>**NOTE:** The computer fan starts up automatically to cool internal components and prevent overheating. It is normal for the internal fan to cycle on and off during routine operation. |
| **(3)** | External monitor port | Connects an external VGA monitor or projector. |
| **(4)** | RJ-45 (network) jack | Connects a network cable. |
| **(5)** | HDMI port | Connects an optional video or audio device, such as a high-definition television, or any compatible digital or audio component. |
| **(6)** | USB port | Connects optional USB devices. |
| **(7)** | Audio-in (microphone) jack | Connects an optional computer headset microphone, stereo array microphone, or monaural microphone. |
| **(8)** | Audio-out (headphone) jack | Produces sound when connected to optional powered stereo speakers, headphones, earbuds, a headset, or television audio. |
| **(9)** | Drive light | On: The hard drive or the optical drive is in use. |

# Rear component

| Component | Description |
|---|---|
| Vent | Enables airflow to cool internal components.<br><br>**NOTE:** The computer fan starts up automatically to cool internal components and prevent overheating. It is normal for the internal fan to cycle on and off during routine operation. |

# Bottom components

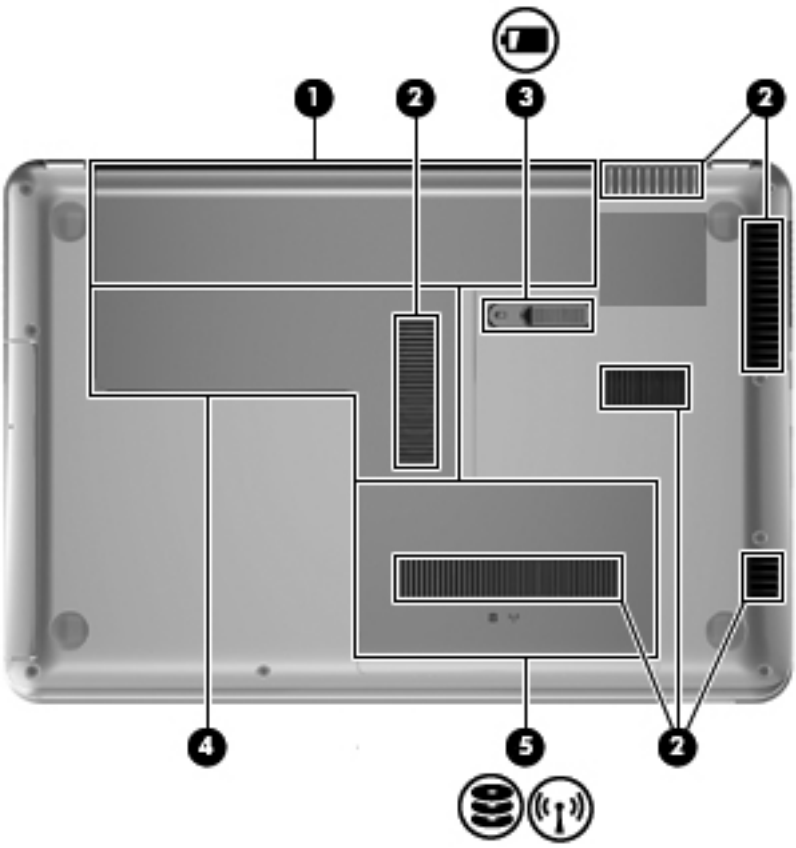


| Component | Description |
|---|---|
| **(1)** Battery bay | Holds the battery. |
| **(2)** Vents (6) | Enable airflow to cool internal components.<br><br>**NOTE:** The computer fan starts up automatically to cool internal components and prevent overheating. It is normal for the internal fan to cycle on and off during routine operation. |

| Component | | Description |
|---|---|---|
| **(3)** | Battery release latch | Releases the battery from the battery bay. |
| **(4)** | Memory module compartment | Contains 2 memory module slots. |
| **(5)** | Hard drive bay | Holds the hard drive and, on select models, the wireless LAN (WLAN) module.<br><br>**CAUTION:** To prevent an unresponsive system, replace the wireless module only with a wireless module authorized for use in the computer by the governmental agency that regulates wireless devices in your country or region. If you replace the module and then receive a warning message, remove the module to restore computer functionality, and then contact technical support through Help and Support. |

# Wireless antennas

At least 2 antennas send and receive signals from one or more wireless devices. These antennas are not visible from the outside of the computer.

**NOTE:** For optimal transmission, keep the areas immediately around the antennas free from obstructions.

To see wireless regulatory notices, refer to the section of the *Regulatory, Safety and Environmental Notices* that applies to your country or region. These notices are located in Help and Support.

# Additional hardware components

| Component | | Description |
|---|---|---|
| **(1)** | Power cord* | Connects an AC adapter to an AC outlet. |
| **(2)** | AC adapter | Converts AC power to DC power. |
| **(3)** | Battery* | Powers the computer when the computer is not plugged into external power. |

*Batteries and power cords vary in appearance by country or region.

# 3 Illustrated parts catalog

## Serial number location

When ordering parts or requesting information, provide the computer serial number and model number located in the battery bay of the computer.

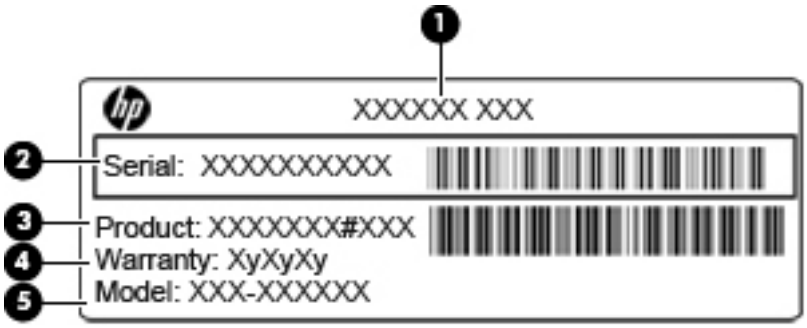


| | |
|---|---|
| **(1)** Product name | **(4)** Warranty period |
| **(2)** Serial number | **(5)** Model description (select models) |
| **(3)** Product number | |

# Computer major components

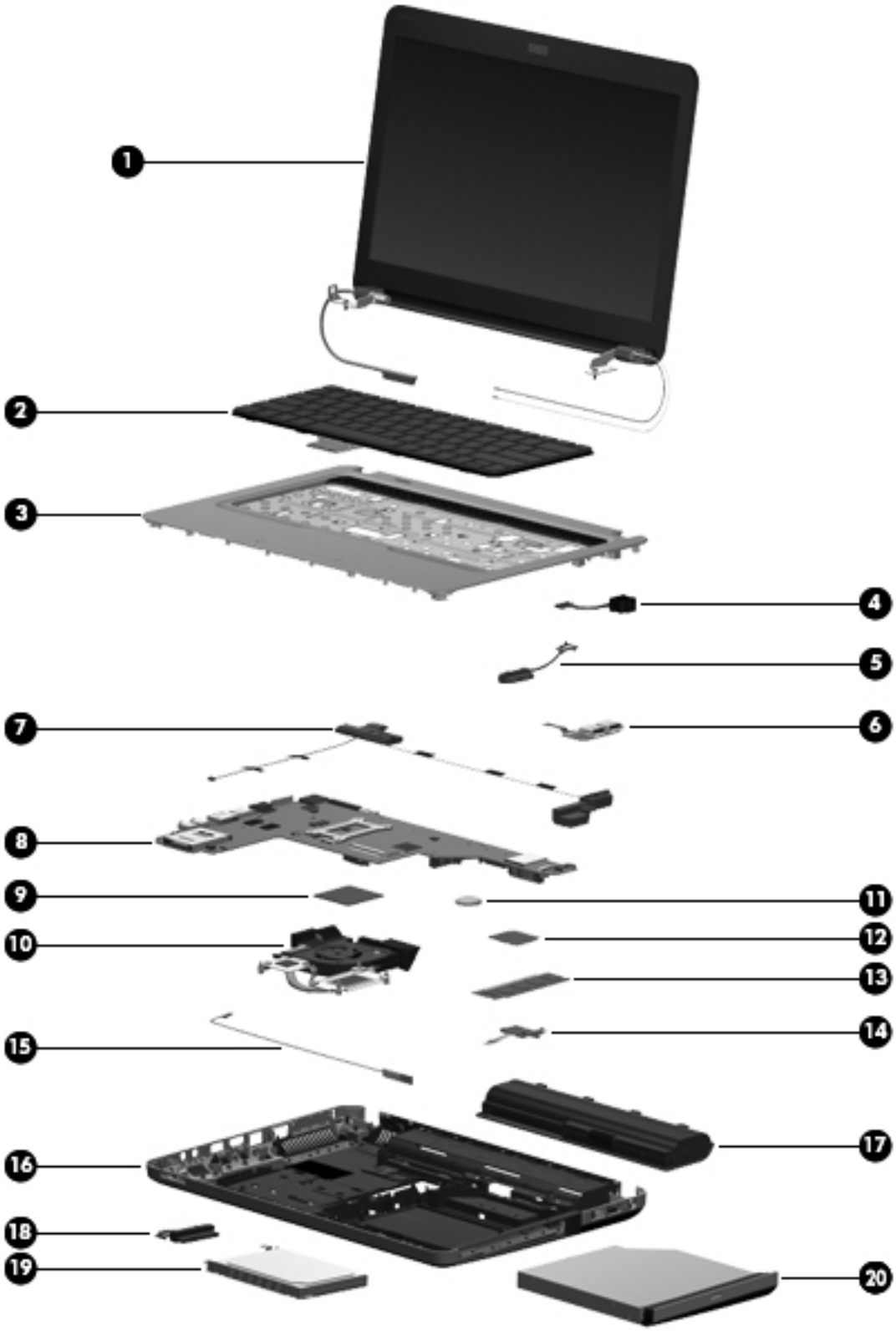

| Item | Description | Spare part number |
|---|---|---|
| (1) | **Display assembly 33.78 cm** (13.3-in) WXGA, HD, BrightView display assembly<br>**NOTE:** See Display assembly components on page 25 for more display assembly internal component spare part information. | |
| | For use in Compaq Presario CQ32 computers | 608017-001 |
| | For use in HP G32 computers | 628920-001 |
| (2) | **Keyboard** (for use in the United States) | 608018-001 |
| (3) | **Top cover** (includes Touchpad) | 608030-001 |
| (4) | **Power connector cable** (includes bracket) | 621884-001 |
| (5) | **Optical Drive Mounting Kit** (includes SATA cable, cable bracket, optical drive bracket, and screws) | 608274-001 |
| (6) | **USB board** (includes cable) | 603922-001 |
| (7) | **Speaker assembly** (includes cable) | 608027-001 |
| (8) | **System board** (includes replacement thermal material; with 512-MB discrete graphics memory) | 608029-001 |
| | System board (includes replacement thermal material; with 1-GB discrete graphics memory) | 615842-001 |
| | System board Park XT (includes replacement thermal material; with 1-GB discrete graphics memory) | 635226-001 |
| | System board Park S3 Pro (includes replacement thermal material; with 1-GB discrete graphics memory) | 635227-001 |
| (9) | **Processor** (includes replacement thermal material) | |
| | **Intel Core i5 processors, Dual Core** | |
| | • 580M (2.66-GHz turbo, 3-MB L3 cache) | 625825-001 |
| | • 560M (2.66-GHz turbo, 3-MB L3 cache) | 625824-001 |
| | • 540M (2.53-GHz, 3-MB L3 cache) | 594188-001 |
| | • 520M (2.40-GHz, 3-MB L3 cache) | 594187-001 |
| | • 480M (2.66–GHz, 3-MB L3 cache) | 634693-001 |
| | • 460M (2.53-GHz turbo, 3-MB L3 cache) | 626039-001 |
| | • 450M (2.40-GHz, 3-MB L3 cache) | 613585-001 |
| | • 430M (2.26-GHz, 3-MB L3 cache) | 597624-001 |
| | **Intel Core i3 processors, Dual Core** | |
| | • 390M (2.66-GHz, 3-MB L3 cache) | 634692-001 |
| | • 380M (2.53-GHz, 3-MB L3 cache) | 625823-001 |
| | • 370M (2.40-GHz, 3-MB L3 cache) | 613584-001 |
| | • 350M (2.26-GHz, 3-MB L3 cache) | 597623-001 |

| Item | Description | Spare part number |
|---|---|---|
| | **Intel Pentium** | |
| | • P6300 (2.26-GHz, 3-MB L3 cache) | 635500-001 |
| | • P6200 (2.13-GHz, 3-MB L3 cache) | 625831-001 |
| | • P6100 (2.0-GHz, 3-MB L3 cache) | 613587-001 |
| | • P6000 (1.86-GHz, 3-MB L3 cache) | 613586-001 |
| **(10)** | **Fan/heat sink assembly** (includes replacement thermal material) | 608010-001 |
| **(11)** | **RTC battery** (includes mounting adhesive) | 449137-001 |
| **(12)** | **WLAN modules** | |
| | **Atheros AR9285 802.11 a/b/g/n 2x2 WiFi adapter**<br><br>For use in Afghanistan, Albania, Algeria, Andorra, Angola, Antigua and Barbuda, Argentian, Armenia, Australia, Austria, Azerbaijan, Bahamas, Bahrain, Barbados, Belgium, Belize, Benin, Bhutan, Bosnia and Herzegovina, Botswana, Brazil, Brunei, Bulgeria, Burkina Faso, Burundi, Cambodia, Cameroon, Cape Verde, Central African Republic, Chad, Chile, People's Republic of China, Colombia, Comoros, Congo, Costa Rica, Croatia, Cyprus, Czech Republic, Zaire, Denmark, Djibouti, Dominica, Dominican Republic, Ecuador, Egypt, El Salvador, Equitorial Guinea, Eritrea, Estonia, Ethiopia, Fiji, Finland, France, Gabon, Gambia, Georgia, Germany, Ghana, Gibraltar, Greece, Grenada, Guatemala, Guinea, Guinea-Bissa, Guyana, Haiti, Honduras, Hong Kong, Hungary, Iceland, India, Indonesia, Ireland, Italy, Ivory Coast, Jamaica, Japan, Jordan, Kazakhstan, Kenya, Kiribati, Korea-South, Kuwait, Kyrgyzstan, Laos, Latvia, Lebanon, Lesotho, Liberia, Martinique, Nether Antilles, French Guiana, Aruba, British Virgin Islands, Bermuda, Syria, Guadeloupe, Liechtenstein, Lithuania, Luxembourg, Macedonia, Madagaascar, Malawi, Malaysia, Maldives, Mali, Malta, Marshall Islands, Mauritania, Mauritius, Mexico, Micronesia, Monaco, Mongolia, Montenegro, Morocco, Mozambique, Namibia, Nauru, Nepal, Netherlands, New Zealand, Nicaragua, Niger, Nigeria, Norway, Oman, Palau, Panama, Papua New Guinea, Paraguay, Peru, Philippines, Poland, Portugal, Republic of Moldova, Romania, rwanda, Samoa, San Marino, Sao tome and Principe, Saudi Arabia, Senegal, Serbia and Montenegro, Seychelles, Sierra Leone, Singapore, Slovakia, Slovenia, Solomon Islands, Somalia, South Africa, Spain, Sri Lanka, St. Kitts and Nevis, St. Lucia, St. Vincent and Gren, Suriname, Swaziland, Sweden, Switzerland, Taiwan, Tajikistan, Tanzania, Thailand, Timor (East), Togo, Tonga, Trinidad and Tobago, Tunisia, Turkey, Turkmenistan, Tuvalu, Uganda, United Arab Emirates ,United Kingdom, Uruguay, Uzbekistan, Vanuatu, Venezuela, Vietnam, Yemen, Zambia, and Zimbabwe | 580101-002 |

| Item | Description | Spare part number |
|---|---|---|
| | **Intel Centrino Wireless-N 1000 802.11b/g/n 1x2**<br><br>For use in Andorra, Antigua and Barbuda, Argentina, Aruba, Australia, Austria, Azerbaijan, Bahamas, Bahrain, Barbados, Belgium, Bermuda, Bolivia, Bosnia and Herzegovina, Brazil, Brunei, Bulgaria, Canada, the Cayman Islands, Chile, People's Republic of China, Colombia, Costa Rica, Croatia, Cyprus, the Czech Republic, Denmark, the Dominican Republic, Ecuador, Egypt, El Salvador, Estonia, Finland, France, French Guiana, Georgia, Germany, Ghana, Greece, Guadeloupe, Guam, Guatemala, Haiti, Honduras, Hong Kong, Hungary, Iceland, India, Indonesia, Ireland, Israel, Italy, Ivory Coast, Jamaica, Japan, Jordan, Kenya, Kuwait, Kyrgyzstan, Latvia, Lebanon, Liechtenstein, Lithuania, Luxembourg, Malawi, Malaysia, Malta, Martinique, Mauritius, Mexico, Monaco, Montenegro, Morocco, the Nether Antilles, Netherlands, New Zealand, Nicaragua, Nigeria, Norway, Oman, Pakistan, Panama, Paraguay, Peru, Philippines, Poland, Portugal, Puerto Rico, Qatar, Romania, San Marino, Saudi Arabia, Senegal, Singapore, Slovakia, Slovenia, South Africa, South Korea, Spain, Sri Lanka, Sweden, Switzerland, Taiwan, Tanzania, Thailand, Trinidad and Tobago, Turkey, Ukraine, United Arab Emirates, United Kingdom, Uruguay, the US Virgin Islands, the United States, Venezuela, and Vietnam | 593530-001 |
| | **Realtek RTL8191SE 802.11b/g/n WiFi Adapter**<br><br>For use in Albania, Algeria, Andorra, Angola, Antigua and Barbuda, Argentina, Armenia, Aruba, Australia, Austria, Azerbaijan, Bahamas Bahrain, Bangladesh, Barbados, Belarus, Belgium, Belize, Benin, Bermuda, Bhutan, Bolivia, Bosnia and Herzegovina, Botswana, Brazil, British Virgin Islands, Brunei, Bulgaria, Burkina Faso, Burundi, Cambodia, Cameroon, Canada, Cape Verde, Cayman Islands, Central African Republic, Chad, Chile, People's Republic of China, Colombia, Comoros, Congo, Costa Rica, Croatia, Cyprus, the Czech Republic, Denmark, Djibouti, Dominica, Dominican Republic, East Timor, Ecuador, Egypt, El Salvador, Equitorial Guinea, Eritrea, Estonia, Ethiopia, Fiji, Finland, France, French Guiana, Gabon, Gambia, Georgia, Germany, Ghana, Gibraltar, Greece Grenada, Guadeloupe, Guam, Guatemala, Guinea, Guinea-Bissa, Guyana, Haiti, Honduras, Hong Kong, Hungary, Iceland, India, Indonesia, Iraq, Ireland, Israel, Italy, Ivory Coast, Jamaica, Japan, Jordan, Kazakhstan, Kenya, Kiribati, Kuwait, Kyrgyzstan, Laos, Latvia, Lebanon, Lesotho, Liberia, Liechtenstein, Lithuania, Luxembourg Macedonia, Madagascar, Malawi, Malaysia, Maldives, Mali, Malta, Marshall Islands, Martinique, Mauritania, Mauritius, Mexico, Micronesia, Monaco, Mongolia, Montenegro, Morocco, Mozambique, Namibia, Nauru, Nepal, Nether Antilles, Netherlands, New Zealand Nicaragua, Niger, Nigeria, Norway, Oman, Pakistan, Palau, Panama, Papua New Guinea, Paraguay, Peru, Philippines, Poland, Portugal, Puerto Rico, Qatar, Republic of Moldova, Romania, Russia, Rwanda, Samoa, San Marino, Sao Tome and Principe, Saudi Arabia, Senegal, Serbia and Montenegro, Seychelles, Sierra Leone, Singapore, Slovakia, Slovenia, Solomon Islands, Somalia, South Africa, South Korea, Spain, Sri Lanka, St. Kitts and Nevis, St. Lucia, St. Vincent and Grenadine, Suriname, Swaziland, Sweden, Switzerland, Syria, Taiwan, Tajikistan, Tanzania, Thailand, Togo, Tonga, Trinidad and Tobago, Tunisia, Turkey, Turkmenistan, Tuvalu, Uganda, Ukraine, United Arab Emirates, the United Kingdom, Uruguay, the US Virgin Islands, the United States, Uzbekistan, Vanuatu, Venezuela, Vietnam, Yemen, Zaire, Zambia, and Zimbabwe | 593533-001 |

| Item | Description | Spare part number |
|---|---|---|
| | **Broadcom 4313AGN 802.11a/b/g/draft-n WiFi Adapter** | 593836-001 |
| | For use in Afghanistan, Albania, Algeria, Andorra, Angola, Antigua and Barbuda, Argentina, Armenia, Aruba, Australia, Austria, Azerbaijan, Bahamas, Bahrain, Bangladesh, Barbados, Belarus, Belgium, Belize, Benin, Bermuda, Bhutan, Bolivia, Bosnia and Herzegovina, Botswana, Brazil, the British Virgin Islands, Brunei, Bulgaria, Burkina Faso, Burundi, Cambodia, Cameroon, Canada, Cape Verde, the Cayman Islands, Central African Republic, Chad, People's Republic of China, Colombia, Comoros, Congo, Costa Rica, Croatia, Cyprus, the Czech Republic, Denmark, Djibouti, Dominica, the Dominican Republic, East Timor, Ecuador, Egypt, El Salvador, Equitorial Guinea, Eritrea, Estonia, Ethiopia, Fiji, Finland, France, French Guiana, Gabon, Gambia, Georgia, Germany, Ghana, Gibraltar, Greece, Grenada, Guadeloupe, Guam, Guatemala, Guinea, Guinea-Bissa, Guyana, Haiti, Honduras, Hong Kong, Hungary, Iceland, India, Iraq, Ireland, Israel, Italy, Ivory Coast, Jamaica, Japan, Jordan, Kazakhstan, Kenya, Kiribati, Kuwait, Kyrgyzstan, Laos, Latvia, Lebanon, Lesotho, Liberia, Martinique, Liechtenstein, Lithuania, Luxembourg, Macedonia, Madagascar, Malawi, Malaysia, Maldives, Mali, Malta, Marshall Islands, Mauritania, Mauritius, Mexico, Micronesia, Monaco, Mongolia, Montenegro, Morocco, Mozambique, Namibia, Nauru, Nepal, the Nether Antilles, the Netherlands, New Zealand, Nicaragua, Niger, Nigeria, Norway, Oman, Pakistan, Palau, Panama, Papua New Guinea, Paraguay, Puerto Rico, Peru, Philippines, Poland, Portugal, Qatar, Republic of Moldova, Romania, Russia, Rwanda, Samoa, San Marino, Sao Tome and Principe, Saudi Arabia, Senegal, Serbia and Montenegro, Seychelles, Sierra Leone, Singapore, Slovakia, Slovenia, Solomon Islands, Somalia, South Africa, South Korea, Spain, Sri Lanka, St. Kitts and Nevis, St. Lucia, St. Vincent and the Grenadines, Suriname, Swaziland, Sweden, Switzerland, Syria, Taiwan, Tajikistan, Tanzania, Thailand, Togo, Tonga, Trinidad and Tobago, Tunisia, Turkey, Turkmenistan, Tuvalu, Uganda, Ukraine, the United Arab Emirates, the United Kingdom, Uruguay, the United States, the US Virgin Islands, Uzbekistan, Vanuatu, Venezuela, Vietnam, Yemen, Zaire, Zambia, and Zimbabwe | |

| Item | Description | Spare part number |
|---|---|---|
| | **Broadcom 4313 802.11b/g/n 1x1 WiFi and 2070 Bluetooth 2.1 +EDR Combo Adapter**<br><br>For use in Afghanistan, Albania, Algeria, Andorra, Angola, Antigua and Barbuda, Argentina, Armenia, Aruba, Australia, Austria, Azerbaijan, Bahamas, Bahrain, Bangladesh, Barbados, Belarus, Belgium, Belize, Benin, Bermuda, Bhutan, Bolivia, Bosnia and Herzegovina, Botswana, Brazil, British Virgin Islands, Brunei, Bulgaria, Burkina Faso, Burundi, Cambodia, Cameroon, Canada, Cape Verde, the Cayman Islands, Central African Republic, Chad, Chile, the People's Republic of China, Colombia, Comoros, Congo, Costa Rica, Croatia, Cyprus, the Czech Republic, Denmark, Djibouti, Dominica, the Dominican Republic, East Timor, Ecuador, Egypt, El Salvador, Equitorial Guinea, Eritrea, Estonia, Ethiopia, Fiji, Finland, France, French Guiana, Gabon, Gambia, Georgia, Germany, Ghana, Gibraltar, Greece, Grenada, Guadeloupe, Guam, Guatemala, Guinea, Guinea-Bissa, Guyana, Haiti, Honduras, Hong Kong, Hungary, Iceland, India, Indonesia, Iraq, Ireland, Israel, Italy, Ivory Coast, Jamaica, Japan, Jordan, Kazakhstan, Kenya, Kiribati, Kuwait, Kyrgyzstan, Laos, Latvia, Lebanon, Lesotho, Liberia, Liechtenstein, Lithuania, Luxembourg, Macedonia, Madagascar, Malawi, Malaysia, Maldives, Mali, Malta, the Marshall Islands, Martinique, Mauritania, Mauritius, Mexico, Micronesia, Monaco, Mongolia, Montenegro, Morocco, Mozambique, Namibia, Nauru, Nepal, the Nether Antilles, the Netherlands, New Zealand, Nicaragua, Niger, Nigeria, Norway, Oman, Pakistan, Palau, Panama, Papua New Guinea, Paraguay, Peru, the Philippines, Poland, Portugal, Puerto Rico, the Republic of Moldova, Romania, Russia, Rwanda, Samoa, San Marino, Sao Tome and Principe, Saudi Arabia, Senegal, Serbia and Montenegro, Seychelles, Sierra Leone, Singapore, Slovakia, Slovenia, the Solomon Islands, Somalia, South Africa, South Korea, Spain, Sri Lanka, St. Kitts and Nevis, St. Lucia, St. Vincent and Grenadines, Suriname, Swaziland, Sweden, Switzerland, Syria, Taiwan, Tajikistan, Tanzania, Thailand, Togo, Tonga, Trinidad and Tobago, Tunisia, Turkey, Turkmenistan, Tuvalu, Uganda, Ukraine, the United Arab Emirates, the United Kingdom, Uruguay, the US Virgin Islands, the United States, Uzbekistan, Vanuatu, Venezuela, Vietnam, Yemen, Zaire, Zambia, and Zimbabwe | 600370-001 |

| Item | Description | Spare part number |
|---|---|---|
| | **Realink RT3090BC4 802.11b/g/n 1x1 WiFi and Bluetooth 2.1+EDR Combo Adapter**<br><br>For use in Afghanistan, Albania, Algeria, Andorra, Angola, Antigua and Barbuda, Argentina, Armenia, Aruba, Australia, Austria, Azerbaijan, Bahamas, Bahrain, Barbados, Belarus, Belgium, Belize, Benin, Bermuda, Bhutan, Bolivia, Bosnia and Herzegovina, Botswana, Brazil, British Virgin Islands, Brunei, Bulgaria, Burkina Faso, Burundi, Cambodia, Cameroon, Canada, Cape Verde, the Cayman Islands, Central African Republic, Chad, Chile, the People's Republic of China, Colombia, Comoros, Congo, Costa Rica, Croatia, Cyprus, the Czech Republic, Denmark, Djibouti, Dominica, the Dominican Republic, East Timor, Ecuador, Egypt, El Salvador, Equitorial Guinea, Eritrea, Estonia, Ethiopia, Fiji, Finland, France, French Guiana, Gabon, Gambia, Georgia, Germany, Ghana, Gibraltar, Greece, Grenada, Guadeloupe, Guam, Guatemala, Guinea, Guinea-Bissa, Guyana, Haiti, Honduras, Hong Kong, Hungary, Iceland, India, Indonesia, Ireland, Israel, Italy, Ivory Coast, Jamaica, Japan, Jordan, Kazakhstan, Kenya, Kiribati, Kuwait, Kyrgyzstan, Laos, Latvia, Lebanon, Lesotho, Liberia, Liechtenstein, Lithuania, Luxembourg, Macedonia, Madagascar, Malawi, Malaysia, Maldives, Mali, Malta, the Marshall Islands, Martinique, Mauritania, Mauritius, Mexico, Micronesia, Monaco, Mongolia, Montenegro, Morocco, Mozambique, Namibia, Nauru, Nepal, the Nether Antilles, the Netherlands, New Zealand, Nicaragua, Niger, Nigeria, Norway, Oman, Pakistan, Palau, Panama, Papua New Guinea, Paraguay, Peru, the Philippines, Poland, Portugal, Puerto Rico, the Republic of Moldova, Romania, Russia, Rwanda, Samoa, San Marino, Sao Tome and Principe, Saudi Arabia, Senegal, Serbia and Montenegro, Seychelles, Sierra Leone, Singapore, Slovakia, Slovenia, the Solomon Islands, Somalia, South Africa, South Korea, Spain, Sri Lanka, St. Kitts and Nevis, St. Lucia, St. Vincent and Grenadines, Suriname, Swaziland, Sweden, Switzerland, Syria, Taiwan, Tajikistan, Tanzania, Thailand, Togo, Tonga, Trinidad and Tobago, Tunisia, Turkey, Turkmenistan, Tuvalu, Uganda, Ukraine, the United Arab Emirates, the United Kingdom, Uruguay, the US Virgin Islands, the United States, Uzbekistan, Vanuatu, Venezuela, Vietnam, Yemen, Zaire, Zambia, and Zimbabwe | 602992-001 |
| **(13)** | **Memory modules** (PC3-10600, 1333-MHz) | |
| | 4-GB | 599092-001 |
| | 1-GB | 598859-001 |
| | 2-GB | 598856-001 |
| **(14)** | **Power button board** (includes cable and bracket) | 608276-001 |
| **(15)** | **Bluetooth module**<br><br>**NOTE:** The Bluetooth module cable is included in the Misc Cable Kit, spare part number 608009-001. | 537921-001 |
| **(16)** | **Base enclosure** (with modem cable and ODD cable) | 608008-001 |
| **(17)** | **Battery** | |
| | 6-cell, 47-WHr (2.20-Ah) Li-ion | 593553-001 |
| | 6-cell, 55-WHr (2.55-Ah) Li-ion | 593554-001 |
| **(18)** | **Hard Drive Mounting Kit** (includes retention screws, bracket screws, and hard drive bracket) | 608015-001 |
| **(19)** | **Hard drive**<br><br>**NOTE:** The hard drive cable is included in the Misc Cable Kit, spare part number 608009-001. | |

| Item | Description | Spare part number |
|---|---|---|
| | 640-GB, 5400 rpm, (requires hard drive hardware kit 608015-001) | 631160-001 |
| | 500-GB, 7200 rpm, (includes hard drive bracket) | 634919-001 |
| | 320-GB, 7200 rpm, (includes hard drive bracket) | 608013-001 |
| | 250-GB, 7200 rpm, (includes hard drive bracket) | 608012-001 |
| | 160-GB, 7200 rpm, (includes hard drive bracket) | 608011-001 |
| **(20)** | **Optical drive** (12.7 mm, SATA, fixed) | |
| | DVD±RW SuperMulti DL Drive with LightScribe | 608021-001 |
| | Blu-ray ROM with LightScribe DVD±R/RW SuperMulti DL Drive | 608022-001 |

# Display assembly components

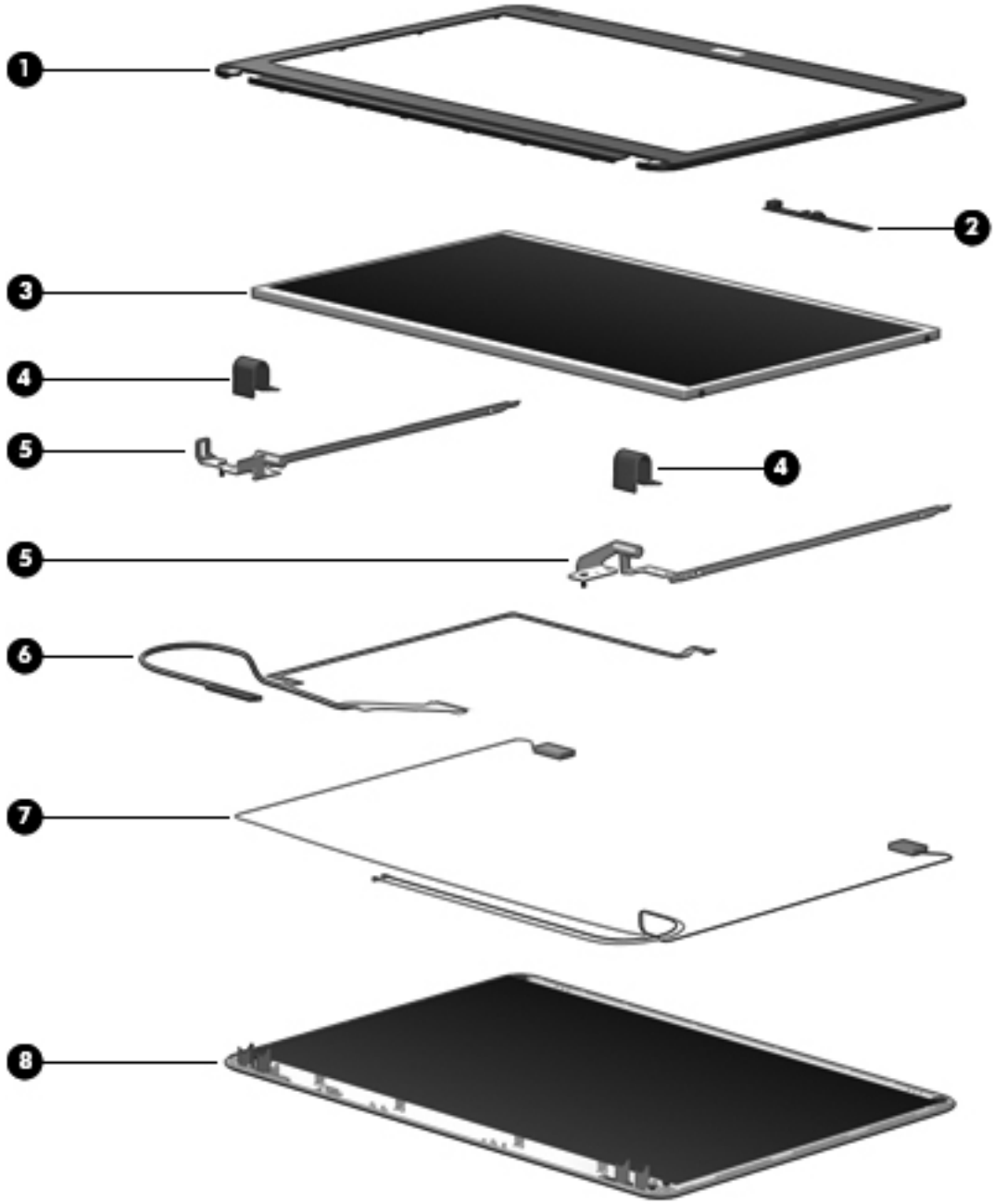

| Item | Description | Spare part number |
|---|---|---|
| **(1)** | **Display bezel** (includes Mylar screw covers) | |
| | For use in Compaq Presario CQ32–branded computers | 608020-001 |
| | For use in HP G32–branded computers | 628918-001 |
| **(2)** | **Webcam module** | 608031-001 |
| **(3)** | **Display panel**, Brightview, high-definition, **33.78 cm** (13.3-in) | 608019-001 |

| Item | Description | Spare part number |
|---|---|---|
| **(4)** | **Display hinge cover** | 608275-001 |
| **(5)** | **Display hinges** | 608016-001 |
| **(6)** | **Display cable kit** | 608272-001 |
| **(7)** | **Display WLAN antennas** | 608006-001 |
| **(8)** | **Display enclosure** | |
| | For use in Compaq Presario CQ32–branded computers | 608007-001 |
| | For use in HP G32–branded computers | 628919-001 |

# Plastics Kit

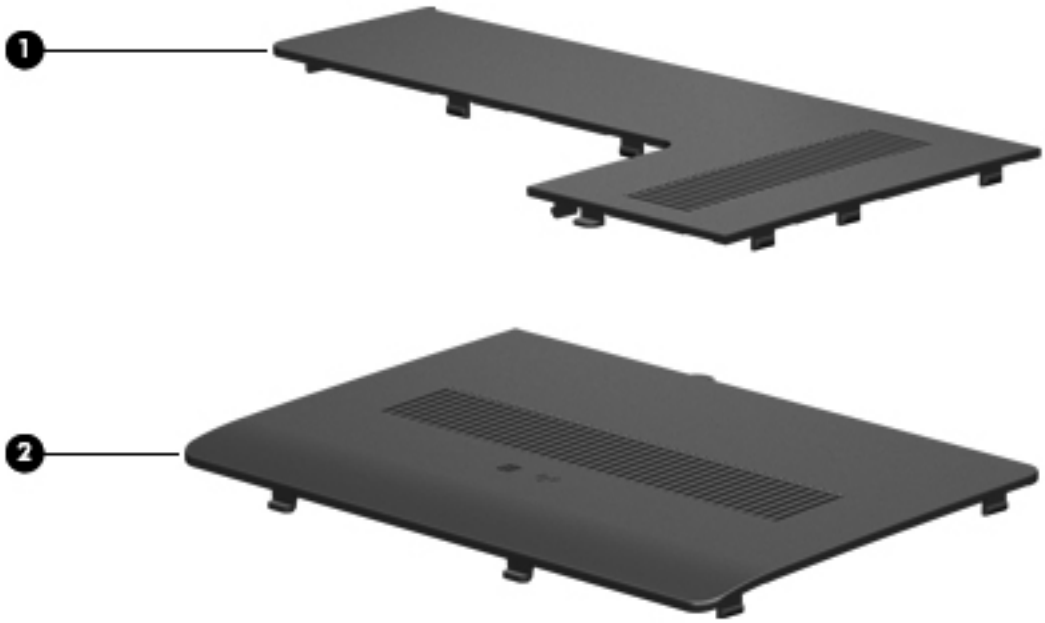


| Item | Description | Spare part number |
|---|---|---|
| | **Plastics kit** | 608023-001 |
| **(1)** | Wireless/memory module mini-card compartment cover (includes captive screw) | |
| **(2)** | Hard drive bay cover (includes captive screws) | |

# Mass storage devices

| Item | Description | Spare part number |
|---|---|---|
| (1) | **Optical drives** (12.7 mm, SATA, fixed) | |
| | DVD±RW SuperMulti DL Drive with LightScribe | 608021-001 |
| | Blu-ray ROM with LightScribe DVD±R/RW SuperMulti DL Drive | 608022-001 |
| (2) | **Hard drive** | |
| | **NOTE:** The hard drive cable is included in the Misc Cable Kit, spare part number 608009-001. | |
| | 640-GB, 5400 rpm, (requires hard drive hardware kit 608015-001) | 631160-001 |
| | 500-GB, 7200 rpm, (includes hard drive bracket) | 634919-001 |
| | 320-GB, 7200 rpm, (includes hard drive bracket) | 608013-001 |
| | 250-GB, 7200 rpm, (includes hard drive bracket) | 608012-001 |
| | 160-GB, 7200 rpm, (includes hard drive bracket) | 608011-001 |
| | **Hard Drive Hardware Kit** (includes retention screws, bracket screws, and hard drive bracket; not illustrated) | 608015-001 |

# Miscellaneous parts

| Description | Spare part number |
|---|---|
| **Smart AC adapter** (90-W with power factor correction) | 609940-001 |
| **Power cord, AC, 3 wire, black, 1.83-m** for use in the People's Republic of China | 490371-AA1 |
| **RTC battery** | 449137-001 |
| **Rubber Feet Kit** | 608228-001 |
| Misc. cable kit (includes Bluetooth module cable and hard drive cable) | 608009-001 |
| **Screw Kit**<br>• Phillips M2.0×3.0 screw<br>• Phillips M2.0×4.0 screw<br>• Phillips M2.5×3.0 broadhead screw<br>• Phillips M2.5×4.0 screw<br>• Phillips M2.5×5.0 screw<br>• Phillips M2.5×7.0 screw<br>• Phillips M2.5×8.0 screw<br>• Phillips M3.0×3.0 screw | 608026-001 |

# Sequential part number listing

| Spare part number | Description |
|---|---|
| 449137-001 | RTC battery |
| 490371-AA1 | Power cord, AC, 3-pin, black,1.83-m, for use in the People's Republic of China |
| 537921-001 | Bluetooth module without cable |
| 580101-002 | Atheros AR9285 802.11 a/b/g/n 2x2 WiFi adapter for use in Afghanistan, Albania, Algeria, Andorra, Angola, Antigua and Barbuda, Argentina, Armenia, Australia, Austria, Azerbaijan, Bahamas, Bahrain, Barbados, Belgium, Belize, Benin, Bhutan, Bosnia and Herzegovina, Botswana, Brazil, Brunei, Bulgaria, Burkina Faso, Burundi, Cambodia, Cameroon, Cape Verde, Central African Republic, Chad, Chile, People's Republic of China, Colombia, Comoros, Congo, Costa Rica, Croatia, Cyprus, Czech Republic, Zaire, Denmark, Djibouti, Dominica, Dominican Republic, Ecuador, Egypt, El Salvador, Equatorial Guinea, Eritrea, Estonia, Ethiopia, Fiji, Finland, France, Gabon, Gambia, Georgia, Germany, Ghana, Gibraltar, Greece, Grenada, Guatemala, Guinea, Guinea-Bissau, Guyana, Haiti, Honduras, Hong Kong, Hungary, Iceland, India, Indonesia, Ireland, Italy, Ivory Coast, Jamaica, Japan, Jordan, Kazakhstan, Kenya, Kiribati, Korea-South, Kuwait, Kyrgyzstan, Laos, Latvia, Lebanon, Lesotho, Liberia, Martinique, Nether Antilles, French Guiana, Aruba, British Virgin Islands, Bermuda, Syria, Guadeloupe, Liechtenstein, Lithuania, Luxembourg, Macedonia, Madagascar, Malawi, Malaysia, Maldives, Mali, Malta, Marshall Islands, Mauritania, Mauritius, Mexico, Micronesia, Monaco, Mongolia, Montenegro, Morocco, Mozambique, Namibia, Nauru, Nepal, Netherlands, New Zealand, Nicaragua, Niger, Nigeria, Norway, Oman, Palau, Panama, Papua New Guinea, Paraguay, Peru, Philippines, Poland, Portugal, Republic of Moldova, Romania, Rwanda, Samoa, San Marino, Sao tome and Principe, Saudi Arabia, Senegal, Serbia and Montenegro, Seychelles, Sierra Leone, Singapore, Slovakia, Slovenia, Solomon Islands, Somalia, South Africa, Spain, Sri Lanka, St. Kitts and Nevis, St. Lucia, St. Vincent and Gren, Suriname, Swaziland, Sweden, Switzerland, Taiwan, Tajikistan, Tanzania, Thailand, Timor (East), Togo, Tonga, Trinidad and Tobago, Tunisia, Turkey, Turkmenistan, Tuvalu, Uganda, United Arab Emirates, United Kingdom, Uruguay, Uzbekistan, Vanuatu, Venezuela, Vietnam, Yemen, Zambia, and Zimbabwe |
| 593530-001 | Intel Centrino Wireless-N 1000 802.11b/g/n 1x2 for use in Andorra, Antigua and Barbuda, Argentina, Aruba, Australia, Austria, Azerbaijan, Bahamas, Bahrain, Barbados, Belgium, Bermuda, Bolivia, Bosnia and Herzegovina, Brazil, Brunei, Bulgaria, Canada, the Cayman Islands, Chile, People's Republic of China, Colombia, Costa Rica, Croatia, Cyprus, the Czech Republic, Denmark, the Dominican Republic, Ecuador, Egypt, El Salvador, Estonia, Finland, France, French Guiana, Georgia, Germany, Ghana, Greece, Guadeloupe, Guam, Guatemala, Haiti, Honduras, Hong Kong, Hungary, Iceland, India, Indonesia, Ireland, Israel, Italy, Ivory Coast, Jamaica, Japan, Jordan, Kenya, Kuwait, Kyrgyzstan, Latvia, Lebanon, Liechtenstein, Lithuania, Luxembourg, Malawi, Malaysia, Malta, Martinique, Mauritius, Mexico, Monaco, Montenegro, Morocco, the Nether Antilles, Netherlands, New Zealand, Nicaragua, Nigeria, Norway, Oman, Pakistan, Panama, Paraguay, Peru, Philippines, Poland, Portugal, Puerto Rico, Qatar, Romania, San Marino, Saudi Arabia, Senegal, Singapore, Slovakia, Slovenia, South Africa, South Korea, Spain, Sri Lanka, Sweden, Switzerland, Taiwan, Tanzania, Thailand, Trinidad and Tobago, Turkey, Ukraine, United Arab Emirates, United Kingdom, Uruguay, the US Virgin Islands, the United States, Venezuela, and Vietnam |

| Spare part number | Description |
|---|---|
| 593533-001 | Realtek RTL8191SE 802.11b/g/n WiFi Adapter for use in Albania, Algeria, Andorra, Angola, Antigua and Barbuda, Argentina, Armenia, Aruba, Australia, Austria, Azerbaijan, Bahamas Bahrain, Bangladesh, Barbados, Belarus, Belgium, Belize, Benin, Bermuda, Bhutan, Bolivia, Bosnia and Herzegovina, Botswana, Brazil, British Virgin Islands, Brunei, Bulgaria, Burkina Faso, Burundi, Cambodia, Cameroon, Canada, Cape Verde, Cayman Islands, Central African Republic, Chad, Chile, People's Republic of China, Colombia, Comoros, Congo, Costa Rica, Croatia, Cyprus, the Czech Republic, Denmark, Djibouti, Dominica, Dominican Republic, East Timor, Ecuador, Egypt, El Salvador, Equitorial Guinea, Eritrea, Estonia, Ethiopia, Fiji, Finland, France, French Guiana, Gabon, Gambia, Georgia, Germany, Ghana, Gibraltar, Greece Grenada, Guadeloupe, Guam, Guatemala, Guinea, Guinea-Bissa, Guyana, Haiti, Honduras, Hong Kong, Hungary, Iceland, India, Indonesia, Iraq, Ireland, Israel, Italy, Ivory Coast, Jamaica, Japan, Jordan, Kazakhstan, Kenya, Kiribati, Kuwait, Kyrgyzstan, Laos, Latvia, Lebanon, Lesotho, Liberia, Liechtenstein, Lithuania, Luxembourg Macedonia, Madagascar, Malawi, Malaysia, Maldives, Mali, Malta, Marshall Islands, Martinique, Mauritania, Mauritius, Mexico, Micronesia, Monaco, Mongolia, Montenegro, Morocco, Mozambique, Namibia, Nauru, Nepal, Nether Antilles, Netherlands, New Zealand Nicaragua, Niger, Nigeria, Norway, Oman, Pakistan, Palau, Panama, Papua New Guinea, Paraguay, Peru, Philippines, Poland, Portugal, Puerto Rico, Qatar, Republic of Moldova, Romania, Russia, Rwanda, Samoa, San Marino, Sao Tome and Principe, Saudi Arabia, Senegal, Serbia and Montenegro, Seychelles, Sierra Leone, Singapore, Slovakia, Slovenia, Solomon Islands, Somalia, South Africa, South Korea, Spain, Sri Lanka, St. Kitts and Nevis, St. Lucia, St. Vincent and Grenadine, Suriname, Swaziland, Sweden, Switzerland, Syria, Taiwan, Tajikistan, Tanzania, Thailand, Togo, Tonga, Trinidad and Tobago, Tunisia, Turkey, Turkmenistan, Tuvalu, Uganda, Ukraine, United Arab Emirates, the United Kingdom, Uruguay, the US Virgin Islands, the United States, Uzbekistan, Vanuatu, Venezuela, Vietnam, Yemen, Zaire, Zambia, and Zimbabwe |
| 593553-001 | 6-cell, 47-Whr (2.20-Ah) Li-ion battery |
| 593554-001 | 6-cell 55-Whr (2.55Ah) Li-ion battery |
| 593836-001 | Broadcom 4313AGN 802.11a/b/g/draft-n WiFi Adapter for use in Afghanistan, Albania, Algeria, Andorra, Angola, Antigua and Barbuda, Argentina, Armenia, Aruba, Australia, Austria, Azerbaijan, Bahamas, Bahrain, Bangladesh, Barbados, Belarus, Belgium, Belize, Benin, Bermuda, Bhutan, Bolivia, Bosnia and Herzegovina, Botswana, Brazil, the British Virgin Islands, Brunei, Bulgaria, Burkina Faso, Burundi, Cambodia, Cameroon, Canada, Cape Verde, the Cayman Islands, Central African Republic, Chad, People's Republic of China, Colombia, Comoros, Congo, Costa Rica, Croatia, Cyprus, the Czech Republic, Denmark, Djibouti, Dominica, the Dominican Republic, East Timor, Ecuador, Egypt, El Salvador, Equitorial Guinea, Eritrea, Estonia, Ethiopia, Fiji, Finland, France, French Guiana, Gabon, Gambia, Georgia, Germany, Ghana, Gibraltar, Greece, Grenada, Guadeloupe, Guam, Guatemala, Guinea, Guinea-Bissa, Guyana, Haiti, Honduras, Hong Kong, Hungary, Iceland, India, Iraq, Ireland, Israel, Italy, Ivory Coast, Jamaica, Japan, Jordan, Kazakhstan, Kenya, Kiribati, Kuwait, Kyrgyzstan, Laos, Latvia, Lebanon, Lesotho, Liberia, Martinique, Liechtenstein, Lithuania, Luxembourg, Macedonia, Madagascar, Malawi, Malaysia, Maldives, Mali, Malta, Marshall Islands, Mauritania, Mauritius, Mexico, Micronesia, Monaco, Mongolia, Montenegro, Morocco, Mozambique, Namibia, Nauru, Nepal, the Nether Antilles, the Netherlands, New Zealand, Nicaragua, Niger, Nigeria, Norway, Oman, Pakistan, Palau, Panama, Papua New Guinea, Paraguay, Puerto Rico, Peru, Philippines, Poland, Portugal, Qatar, Republic of Moldova, Romania, Russia, Rwanda, Samoa, San Marino, Sao Tome and Principe, Saudi Arabia, Senegal, Serbia and Montenegro, Seychelles, Sierra Leone, Singapore, Slovakia, Slovenia, Solomon Islands, Somalia, South Africa, South Korea, Spain, Sri Lanka, St. Kitts and Nevis, St. Lucia, St. Vincent and the Grenadines, Suriname, Swaziland, Sweden, Switzerland, Syria, Taiwan, Tajikistan, Tanzania, Thailand, Togo, Tonga, Trinidad and Tobago, Tunisia, Turkey, Turkmenistan, Tuvalu, Uganda, Ukraine, the United Arab Emirates, the United Kingdom, Uruguay, the United States, the US Virgin Islands, Uzbekistan, Vanuatu, Venezuela, Vietnam, Yemen, Zaire, Zambia, and Zimbabwe |
| 594187-002 | Intel Core i5 520M Dual Core processor (2.40-GHz, 3-MB L3 cache) |
| 594188-002 | Intel Core i5 540M Dual Core processor (2.53-GHz, 3-MB L3 cache) |
| 597623-001 | Intel Core i3 350M Dual-Core processor (2.26-GHz, 3-MB L3 cache) |

| Spare part number | Description |
|---|---|
| 597624-001 | Intel Core i5 430M Dual Core processor (2.26-GHz, 3-MB L3 cache) |
| 598856-001 | Memory module, 2-GB, PC3 10600, 1333-MHz |
| 598859-001 | Memory module, 1-GB, PC3 10600, 1333-MHz |
| 599092-001 | Memory module, 4-GB, PC3 10600, 1333-MHz |
| 600370-001 | Broadcom 4313 802.11b/g/n 1x1 WiFi and 2070 Bluetooth 2.1+EDR Combo Adapter for use in Afghanistan, Albania, Algeria, Andorra, Angola, Antigua and Barbuda, Argentina, Armenia, Aruba, Australia, Austria, Azerbaijan, Bahamas, Bahrain, Bangladesh, Barbados, Belarus, Belgium, Belize, Benin, Bermuda, Bhutan, Bolivia, Bosnia and Herzegovina, Botswana, Brazil, British Virgin Islands, Brunei, Bulgaria, Burkina Faso, Burundi, Cambodia, Cameroon, Canada, Cape Verde, the Cayman Islands, Central African Republic, Chad, Chile, the People's Republic of China, Colombia, Comoros, Congo, Costa Rica, Croatia, Cyprus, the Czech Republic, Denmark, Djibouti, Dominica, the Dominican Republic, East Timor, Ecuador, Egypt, El Salvador, Equitorial Guinea, Eritrea, Estonia, Ethiopia, Fiji, Finland, France, French Guiana, Gabon, Gambia, Georgia, Germany, Ghana, Gibraltar, Greece, Grenada, Guadeloupe, Guam, Guatemala, Guinea, Guinea-Bissa, Guyana, Haiti, Honduras, Hong Kong, Hungary, Iceland, India, Indonesia, Iraq, Ireland, Israel, Italy, Ivory Coast, Jamaica, Japan, Jordan, Kazakhstan, Kenya, Kiribati, Kuwait, Kyrgyzstan, Laos, Latvia, Lebanon, Lesotho, Liberia, Liechtenstein, Lithuania, Luxembourg, Macedonia, Madagascar, Malawi, Malaysia, Maldives, Mali, Malta, the Marshall Islands, Martinique, Mauritania, Mauritius, Mexico, Micronesia, Monaco, Mongolia, Montenegro, Morocco, Mozambique, Namibia, Nauru, Nepal, the Nether Antilles, the Netherlands, New Zealand, Nicaragua, Niger, Nigeria, Norway, Oman, Pakistan, Palau, Panama, Papua New Guinea, Paraguay, Peru, the Philippines, Poland, Portugal, Puerto Rico, the Republic of Moldova, Romania, Russia, Rwanda, Samoa, San Marino, Sao Tome and Principe, Saudi Arabia, Senegal, Serbia and Montenegro, Seychelles, Sierra Leone, Singapore, Slovakia, Slovenia, the Solomon Islands, Somalia, South Africa, South Korea, Spain, Sri Lanka, St. Kitts and Nevis, St. Lucia, St. Vincent and Grenadines, Suriname, Swaziland, Sweden, Switzerland, Syria, Taiwan, Tajikistan, Tanzania, Thailand, Togo, Tonga, Trinidad and Tobago, Tunisia, Turkey, Turkmenistan, Tuvalu, Uganda, Ukraine, the United Arab Emirates, the United Kingdom, Uruguay, the US Virgin Islands, the United States, Uzbekistan, Vanuatu, Venezuela, Vietnam, Yemen, Zaire, Zambia, and Zimbabwe |
| 602992-001 | Realink RT3090BC4 802.11b/g/n 1x1 WiFi and Bluetooth 2.1+EDR Combo Adapter for use in Afghanistan, Albania, Algeria, Andorra, Angola, Antigua and Barbuda, Argentina, Armenia, Aruba, Australia, Austria, Azerbaijan, Bahamas, Bahrain, Barbados, Belarus, Belgium, Belize, Benin, Bermuda, Bhutan, Bolivia, Bosnia and Herzegovina, Botswana, Brazil, British Virgin Islands, Brunei, Bulgaria, Burkina Faso, Burundi, Cambodia, Cameroon, Canada, Cape Verde, the Cayman Islands, Central African Republic, Chad, Chile, the People's Republic of China, Colombia, Comoros, Congo, Costa Rica, Croatia, Cyprus, the Czech Republic, Denmark, Djibouti, Dominica, the Dominican Republic, East Timor, Ecuador, Egypt, El Salvador, Equitorial Guinea, Eritrea, Estonia, Ethiopia, Fiji, Finland, France, French Guiana, Gabon, Gambia, Georgia, Germany, Ghana, Gibraltar, Greece, Grenada, Guadeloupe, Guam, Guatemala, Guinea, Guinea-Bissa, Guyana, Haiti, Honduras, Hong Kong, Hungary, Iceland, India, Indonesia, Ireland, Israel, Italy, Ivory Coast, Jamaica, Japan, Jordan, Kazakhstan, Kenya, Kiribati, Kuwait, Kyrgyzstan, Laos, Latvia, Lebanon, Lesotho, Liberia, Liechtenstein, Lithuania, Luxembourg, Macedonia, Madagascar, Malawi, Malaysia, Maldives, Mali, Malta, the Marshall Islands, Martinique, Mauritania, Mauritius, Mexico, Micronesia, Monaco, Mongolia, Montenegro, Morocco, Mozambique, Namibia, Nauru, Nepal, the Nether Antilles, the Netherlands, New Zealand, Nicaragua, Niger, Nigeria, Norway, Oman, Pakistan, Palau, Panama, Papua New Guinea, Paraguay, Peru, the Philippines, Poland, Portugal, Puerto Rico, the Republic of Moldova, Romania, Russia, Rwanda, Samoa, San Marino, Sao Tome and Principe, Saudi Arabia, Senegal, Serbia and Montenegro, Seychelles, Sierra Leone, Singapore, Slovakia, Slovenia, the Solomon Islands, Somalia, South Africa, South Korea, Spain, Sri Lanka, St. Kitts and Nevis, St. Lucia, St. Vincent and Grenadines, Suriname, Swaziland, Sweden, Switzerland, Syria, Taiwan, Tajikistan, Tanzania, Thailand, Togo, Tonga, Trinidad and Tobago, Tunisia, Turkey, Turkmenistan, Tuvalu, Uganda, Ukraine, the United Arab Emirates, the United Kingdom, Uruguay, the US Virgin Islands, the United States, Uzbekistan, Vanuatu, Venezuela, Vietnam, Yemen, Zaire, Zambia, and Zimbabwe |
| 603922-001 | USB board |

| Spare part number | Description |
|---|---|
| 608006-001 | Display WLAN antennas |
| 608007-001 | Display enclosure for use in Compaq Presario CQ32 computers |
| 608008-001 | Base enclosure |
| 608009-001 | Misc Cable Kit (includes Bluetooth module cable and hard drive cable) |
| 608010-001 | Fan/heat sink |
| 608011-001 | 160-GB 7200 rpm hard drive, (includes hard drive bracket) |
| 608012-001 | 250-GB, 7200 rpm hard drive, (includes hard drive bracket) |
| 608013-001 | 320-GB, 7200 rpm hard drive, (includes hard drive bracket) |
| 608015-001 | Hard drive hardware kit (includes retention screws, bracket screws, and hard drive bracket) |
| 608016-001 | Display bracket (with hinges) |
| 608017-001 | **33.78 cm** (13.3-in) WXGA Brightview display assembly for use in Compaq Presario CQ32 computers |
| 608018-001 | Keyboard for use in the United States |
| 608019-001 | **33.78 cm** (13.3-in) display panel, high definition |
| 608020-001 | Display bezel (includes Mylar screw covers) for use in Compaq Presario CQ32 computers |
| 608021-001 | DVD±RW SuperMulti DL Drive with LightScribe |
| 608022-001 | Blu-ray ROM with LightScribe DVD±R/RW SuperMulti DL Drive |
| 608023-001 | Plastics kit (with hard drive compartment cover and memory/wireless compartment cover) |
| 608026-001 | Screw Kit |
| 608027-001 | Speaker assembly (includes cable) |
| 608029-001 | System board with 512-MB of discrete graphics memory (includes replacement thermal material) |
| 608030-001 | Top cover (includes Touchpad and bracket, button board, and cable) |
| 608031-001 | Webcam module |
| 608228-001 | Rubber kit |
| 608272-001 | Display cable kit |
| 608274-001 | Optical Drive Mounting Kit (includes SATA cable, cable bracket, optical drive bracket, and screws) |
| 608275-001 | Display hinge cover |
| 608276-001 | Power button board (includes cable and bracket) |
| 609940-001 | 90-W Smart AC adapter |
| 613584-001 | Intel Core i3 370M Dual Core (2.40-GHz, 3-MB L3 cache) |
| 613585-001 | Intel Core i5 450M Dual Core processor (2.40-GHz, 3-MB L3 cache) |
| 613586-001 | Intel Pentium P6000 processor (1.86-MHz, 3-MB L3 cache) |
| 613587-001 | Intel Pentium P6100 processor (2.0-GHz, 3-MB L3 cache) |

| Spare part number | Description |
|---|---|
| 615842-001 | System board with 1-GB discrete graphics memory (includes replacement thermal material) |
| 621884-001 | Power connector with cable (includes bracket) |
| 625823-001 | Intel Core i3 380M Dual Core processor (2.53-GHz, 3-MB L3 cache) |
| 625824-001 | Intel Core i5 560M Dual Core processor (2.66–3.2-GHz, 3-MB L3 cache) |
| 625825-001 | Intel Core i5 580M Dual Core processor (2.66–3.3-GHz, -3MB, L3 cache) |
| 625831-001 | Intel Pentium P6200 processor (2.13-GHz, 3-MB, L3 cache) |
| 626039-001 | Intel Core i5 460M Dual Core processor (2.53-GHz, 3-MB L3 cache) |
| 628918-001 | Display bezel (includes Mylar screw covers) for use in HP G32–branded computers |
| 628919-001 | Display enclosure for use in HP G32–branded computers |
| 628920-001 | **33.78 cm** (13.3-in) WXGA Brightview display assembly for use in HP G32–branded computers |
| 631160-001 | 640-GB, 5400 rpm hard drive, (requires hard drive hardware kit 608015-001) |
| 634692-001 | Intel Core i3 390M Dual Core processor (2.66-GHz, 3-MB L3 cache) |
| 634693-001 | Intel Core i5 480M Dual Core processor (2.66-GHz, 3-MB L3 cache) |
| 634919–001 | 500-GB, 7200 rpm hard drive, (includes hard drive mounting bracket) |
| 635226-001 | System board Park XT (includes replacement thermal material; with 1-GB discrete graphics memory) |
| 635227-001 | System board Park S3 Pro (includes replacement thermal material with 1-GB discrete graphics memory) |
| 635500-001 | Intel Pentium P6300 processor (2.26-GHx 3–MB L3 cache) |

# 4 Removal and replacement procedures

## Preliminary replacement requirements

### Tools required

You will need the following tools to complete the removal and replacement procedures:

- Flat-bladed screwdriver
- Magnetic screwdriver
- Phillips P0 and P1 screwdrivers

### Service considerations

The following sections include some of the considerations that you must keep in mind during disassembly and assembly procedures.

**NOTE:** As you remove each subassembly from the computer, place the subassembly (and all accompanying screws) away from the work area to prevent damage.

#### Plastic parts

Using excessive force during disassembly and reassembly can damage plastic parts. Use care when handling the plastic parts. Apply pressure only at the points designated in the maintenance instructions.

## Cables and connectors

△ **CAUTION:** When servicing the computer, be sure that cables are placed in their proper locations during the reassembly process. Improper cable placement can damage the computer.

Cables must be handled with extreme care to avoid damage. Apply only the tension required to unseat or seat the cables during removal and insertion. Handle cables by the connector whenever possible. In all cases, avoid bending, twisting, or tearing cables. Be sure that cables are routed in such a way that they cannot be caught or snagged by parts being removed or replaced. Handle flex cables with extreme care; these cables tear easily.

## Drive handling

△ **CAUTION:** Drives are fragile components that must be handled with care. To prevent damage to the computer, damage to a drive, or loss of information, observe these precautions:

Before removing or inserting a hard drive, shut down the computer. If you are unsure whether the computer is off or in Hibernation, turn the computer on, and then shut it down through the operating system.

Before handling a drive, be sure that you are discharged of static electricity. While handling a drive, avoid touching the connector.

Before removing a diskette drive or optical drive, be sure that a diskette or disc is not in the drive and be sure that the optical drive tray is closed.

Handle drives on surfaces covered with at least one inch of shock-proof foam.

Avoid dropping drives from any height onto any surface.

After removing a hard drive, an optical drive, or a diskette drive, place it in a static-proof bag.

Avoid exposing a hard drive to products that have magnetic fields, such as monitors or speakers.

Avoid exposing a drive to temperature extremes or liquids.

If a drive must be mailed, place the drive in a bubble pack mailer or other suitable form of protective packaging and label the package “FRAGILE.”

# Grounding guidelines

## Electrostatic discharge damage

Electronic components are sensitive to electrostatic discharge (ESD). Circuitry design and structure determine the degree of sensitivity. Networks built into many integrated circuits provide some protection, but in many cases, ESD contains enough power to alter device parameters or melt silicon junctions.

A discharge of static electricity from a finger or other conductor can destroy static-sensitive devices or microcircuitry. Even if the spark is neither felt nor heard, damage may have occurred.

An electronic device exposed to ESD may not be affected at all and can work perfectly throughout a normal cycle. Or the device may function normally for a while, then degrade in the internal layers, reducing its life expectancy.

△ **CAUTION:** To prevent damage to the computer when you are removing or installing internal components, observe these precautions:

Keep components in their electrostatic-safe containers until you are ready to install them.

Use nonmagnetic tools.

Before touching an electronic component, discharge static electricity by using the guidelines described in this section.

Avoid touching pins, leads, and circuitry. Handle electronic components as little as possible.

If you remove a component, place it in an electrostatic-safe container.

The following table shows how humidity affects the electrostatic voltage levels generated by different activities.

△ **CAUTION:** A product can be degraded by as little as 700 V.

**Typical electrostatic voltage levels**

| | Relative humidity | | |
|---|---|---|---|
| **Event** | **10%** | **40%** | **55%** |
| Walking across carpet | 35,000 V | 15,000 V | 7,500 V |
| Walking across vinyl floor | 12,000 V | 5,000 V | 3,000 V |
| Motions of bench worker | 6,000 V | 800 V | 400 V |
| Removing DIPS from plastic tube | 2,000 V | 700 V | 400 V |
| Removing DIPS from vinyl tray | 11,500 V | 4,000 V | 2,000 V |
| Removing DIPS from Styrofoam | 14,500 V | 5,000 V | 3,500 V |
| Removing bubble pack from PCB | 26,500 V | 20,000 V | 7,000 V |
| Packing PCBs in foam-lined box | 21,000 V | 11,000 V | 5,000 V |

## Packaging and transporting guidelines

Follow these grounding guidelines when packaging and transporting equipment:

- To avoid hand contact, transport products in static-safe tubes, bags, or boxes.
- Protect ESD-sensitive parts and assemblies with conductive or approved containers or packaging.
- Keep ESD-sensitive parts in their containers until the parts arrive at static-free workstations.
- Place items on a grounded surface before removing items from their containers.
- Always be properly grounded when touching a component or assembly.
- Store reusable ESD-sensitive parts from assemblies in protective packaging or nonconductive foam.
- Use transporters and conveyors made of antistatic belts and roller bushings. Be sure that mechanized equipment used for moving materials is wired to ground and that proper materials are selected to avoid static charging. When grounding is not possible, use an ionizer to dissipate electric charges.

## Workstation guidelines

Follow these grounding workstation guidelines:

- Cover the workstation with approved static-shielding material.
- Use a wrist strap connected to a properly grounded work surface and use properly grounded tools and equipment.
- Use conductive field service tools, such as cutters, screwdrivers, and vacuums.
- When fixtures must directly contact dissipative surfaces, use fixtures made only of static-safe materials.
- Keep the work area free of nonconductive materials, such as ordinary plastic assembly aids and Styrofoam.
- Handle ESD-sensitive components, parts, and assemblies by the case or PCM laminate. Handle these items only at static-free workstations.
- Avoid contact with pins, leads, or circuitry.
- Turn off power and input signals before inserting or removing connectors or test equipment.

## Equipment guidelines

Grounding equipment must include either a wrist strap or a foot strap at a grounded workstation.

- When seated, wear a wrist strap connected to a grounded system. Wrist straps are flexible straps with a minimum of one megohm ±10% resistance in the ground cords. To provide proper ground, wear a strap snugly against the skin at all times. On grounded mats with banana-plug connectors, use alligator clips to connect a wrist strap.
- When standing, use foot straps and a grounded floor mat. Foot straps (heel, toe, or boot straps) can be used at standing workstations and are compatible with most types of shoes or boots. On conductive floors or dissipative floor mats, use foot straps on both feet with a minimum of one megohm resistance between the operator and ground. To be effective, the conductive strips must be worn in contact with the skin.

The following grounding equipment is recommended to prevent electrostatic damage:

- Antistatic tape
- Antistatic smocks, aprons, and sleeve protectors
- Conductive bins and other assembly or soldering aids
- Non-conductive foam
- Conductive tabletop workstations with ground cords of one megohm resistance
- Static-dissipative tables or floor mats with hard ties to the ground
- Field service kits
- Static awareness labels
- Material-handling packages
- Non-conductive plastic bags, tubes, or boxes
- Metal tote boxes
- Electrostatic voltage levels and protective materials

The following table lists the shielding protection provided by antistatic bags and floor mats.

| Material | Use | Voltage protection level |
|---|---|---|
| Antistatic plastic | Bags | 1,500 V |
| Carbon-loaded plastic | Floor mats | 7,500 V |
| Metallized laminate | Floor mats | 5,000 V |

# Component replacement procedures

This chapter provides removal and replacement procedures.

There are as many as 75 screws, in 12 different sizes, that must be removed, replaced, or loosened when servicing the computer. Make special note of each screw size and location during removal and replacement.

## Serial number

The serial number label, located in the battery bay of the computer, provides important information that you may need when contacting technical support.

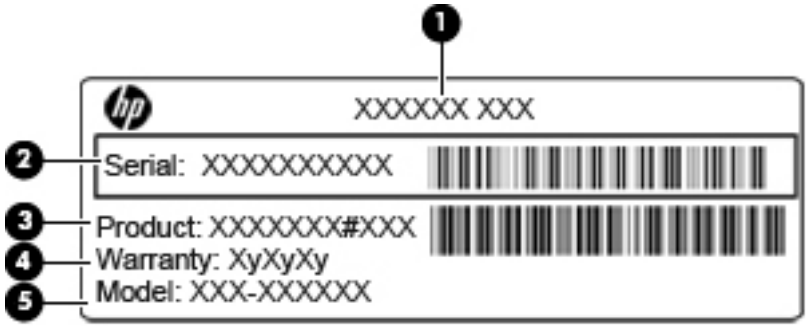


- Product name **(1)**. This is the product name affixed to the front of the computer.
- Serial number (s/n) **(2)**. This is an alphanumeric identifier that is unique to each product.
- Part number/Product number (p/n) **(3)**. This number provides specific information about the product's hardware components. The part number helps a service technician to determine what components and parts are needed.
- Warranty period **(4)**. This number describes the duration (in years) of the warranty period for the computer.
- Model description **(5)**. This is the alphanumeric identifier used to locate documents, drivers, and support for the computer.

## Computer feet

| Description | Spare part number |
|---|---|
| Rubber Feet Kit | 608228-001 |

The computer feet are adhesive-backed rubber pads. The feet attach to the base enclosure in the locations illustrated below.

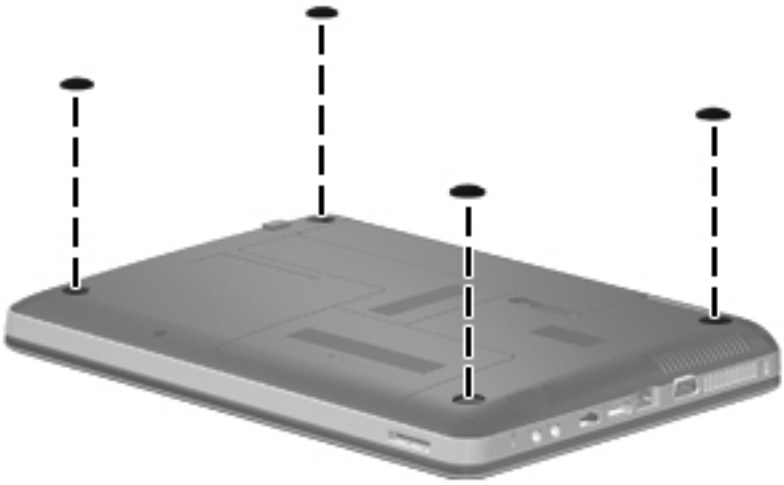

## Battery

| Description | Spare part number |
|---|---|
| 6-cell, 47-WHr (2.20-Ah) Li-ion | 593553-001 |
| 6-cell, 55-WHr (2.55Ah) Li-ion | 593554-001 |

Before disassembling the computer, follow these steps:

1. Shut down the computer. If you are unsure whether the computer is off or in Hibernation, turn the computer on, and then shut it down through the operating system.
2. Disconnect all external devices connected to the computer.
3. Disconnect the power from the computer by first unplugging the power cord from the AC outlet and then unplugging the AC adapter from the computer.

Remove the battery:

1. Turn the computer upside down on a flat surface.
2. Slide the battery release latch **(1)** to release the battery.
3. Pivot the battery **(2)** upward and lift it out of the computer **(3)**.

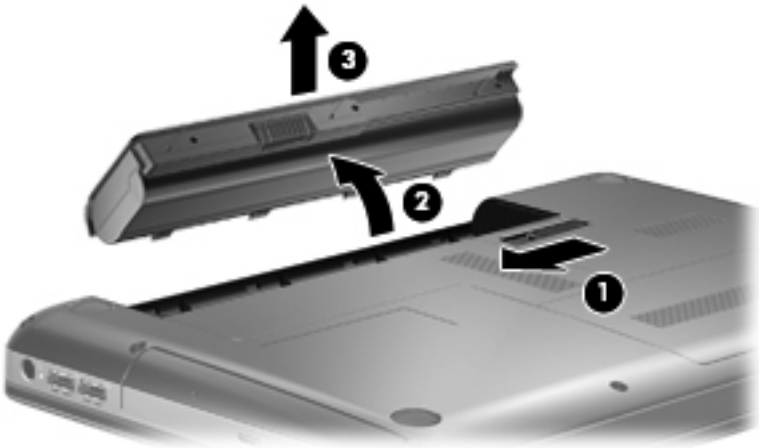


To insert the battery, insert the rear edge of the battery into the battery bay and pivot the front edge downward until the battery is seated. The battery release latch automatically locks the battery into place.

## Memory module

| Description | Spare part number |
|---|---|
| 4-GB, PC3 10600, 1333-MHz | 599092-001 |
| 2-GB, PC3 10600, 1333-MHz | 598856-001 |
| 1-GB, PC3 10600, 1333-MHz | 598859-001 |

Before removing the memory module, follow these steps:

1. Shut down the computer. If you are unsure whether the computer is off or in Hibernation, turn the computer on, and then shut it down through the operating system.
2. Disconnect all external devices connected to the computer.
3. Disconnect the power from the computer by first unplugging the power cord from the AC outlet and then unplugging the AC adapter from the computer.
4. Remove the battery (see Battery on page 41).

Remove the memory module:

1. Turn the computer upside down with the front toward you.
2. Remove the Phillips PM2.5×5.0 screw **(1)** that secures the memory/wireless module compartment cover to the computer.

3. Lift the cover **(2)** and remove it **(3)**. The memory/wireless compartment cover is included in the Plastics Kit, spare part number 608023-001.

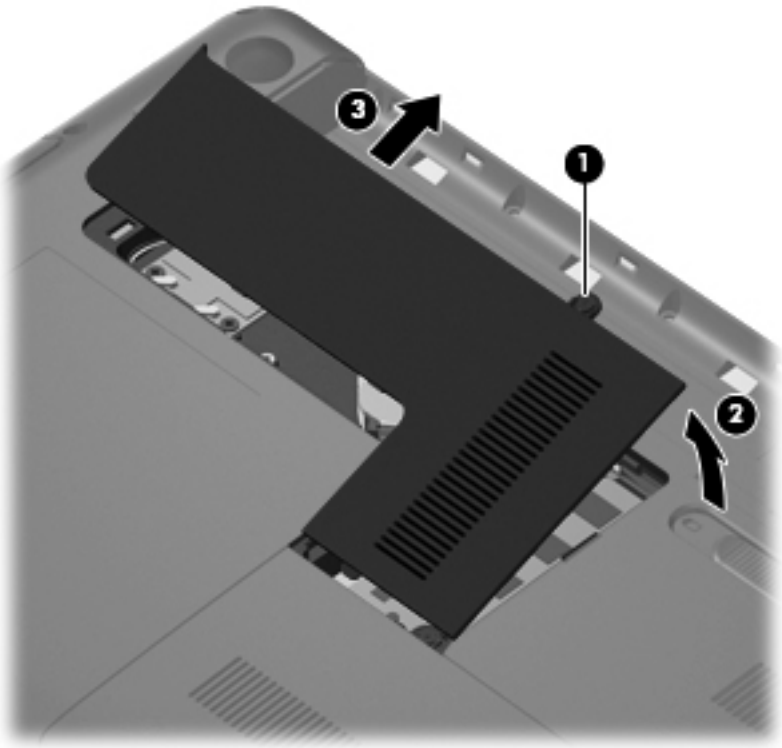


4. Spread the retaining tabs **(1)** on each side of the memory module slot to release the memory module. (The edge of the module opposite the slot rises away from the computer.)

5. Remove the module **(2)** by pulling it away from the slot at an angle.

**NOTE:** Memory modules are designed with a notch **(3)** to prevent incorrect insertion into the memory module slot.

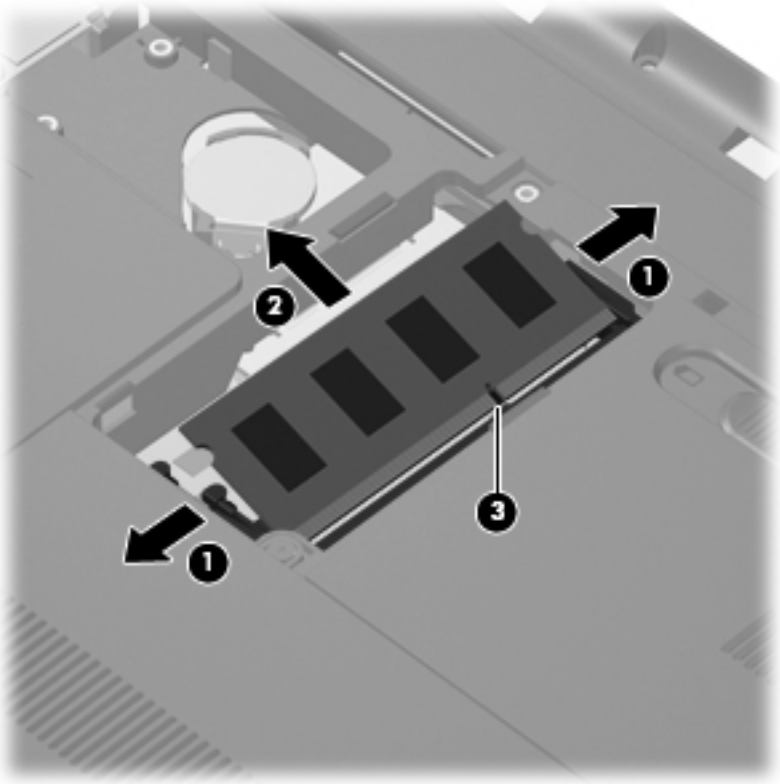


Reverse this procedure to install a memory module.

# RTC battery

| Description | Spare part number |
|---|---|
| RTC battery | 449137-001 |

Before removing the RTC battery, follow these steps:

1. Shut down the computer. If you are unsure whether the computer is off or in Hibernation, turn the computer on, and then shut it down through the operating system.
2. Disconnect all external devices connected to the computer.
3. Disconnect the power from the computer by first unplugging the power cord from the AC outlet and then unplugging the AC adapter from the computer.
4. Remove the battery (see Battery on page 41).
5. Hard drive cover (see Hard drive on page 51)

Remove the RTC battery:

1. Turn the system board upside down.
2. Release the RTC battery from the clips on the system board **(1)**.
3. Remove the RTC battery **(2)**.

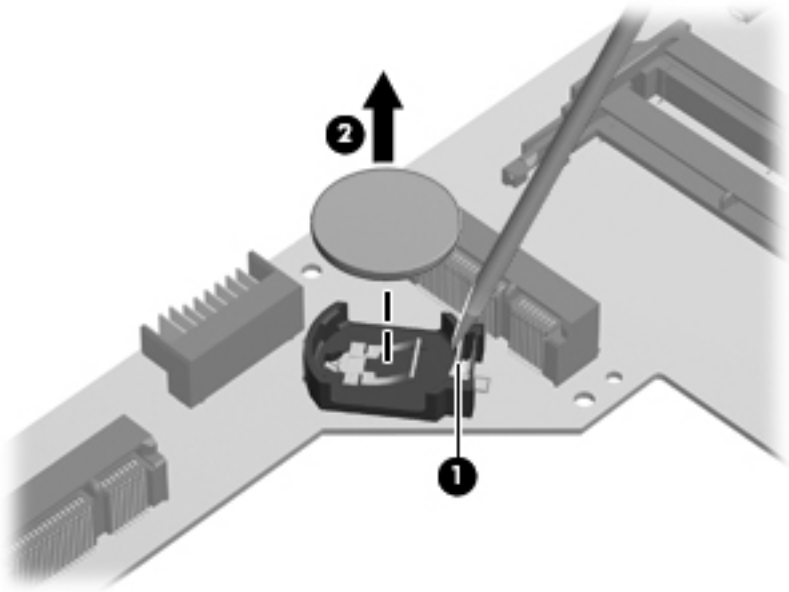


Reverse this procedure to install the RTC battery.

# WLAN module

**NOTE:** The WLAN module and the WWAN module are not interchangeable.

| Description | Spare part number |
|---|---|
| Atheros AR9285 802.11 a/b/g/n 2x2 WiFi adapter<br><br>For use in Afghanistan, Albania, Algeria, Andorra, Angola, Antigua and Barbuda, Argentian, Armenia, Australia, Austria, Azerbaijan, Bahamas, Bahrain, Barbados, Belgium, Belize, Benin, Bhutan, Bosnia and Herzegovina, Botswana, Brazil, Brunei, Bulgeria, Burkina Faso, Burundi, Cambodia, Cameroon, Cape Verde, Central African Republic, Chad, Chile, People's Republic of China, Colombia, Comoros, Congo, Costa Rica, Croatia, Cyprus, Czech Republic, Zaire, Denmark, Djibouti, Dominica, Dominican Republic, Ecuador, Egypt, El Salvador, Equitorial Guinea, Eritrea, Estonia, Ethiopia, Fiji, Finland, France, Gabon, Gambia, Georgia, Germany, Ghana, Gibraltar, Greece, Grenada, Guatemala, Guinea, Guinea-Bissa, Guyana, Haiti, Honduras, Hong Kong, Hungary, Iceland, India, Indonesia, Ireland, Italy, Ivory Coast, Jamaica, Japan, Jordan, Kazakhstan, Kenya, Kiribati, Korea-South, Kuwait, Kyrgyzstan, Laos, Latvia, Lebanon, Lesotho, Liberia, Martinique, Nether Antilles, French Guiana, Aruba, British Virgin Islands, Bermuda, Syria, Guadeloupe, Liechtenstein, Lithuania, Luxembourg, Macedonia, Madagaascar, Malawi, Malaysia, Maldives, Mali, Malta, Marshall Islands, Mauritania, Mauritius, Mexico, Micronesia, Monaco, Mongolia, Montenegro, Morocco, Mozambique, Namibia, Nauru, Nepal, Netherlands, New Zealand, Nicaragua, Niger, Nigeria, Norway, Oman, Palau, Panama, Papua New Guinea, Paraguay, Peru, Philippines, Poland, Portugal, Republic of Moldova, Romania, rwanda, Samoa, San Marino, Sao tome and Principe, Saudi Arabia, Senegal, Serbia and Montenegro, Seychelles, Sierra Leone, Singapore, Slovakia, Slovenia, Solomon Islands, Somalia, South Africa, Spain, Sri Lanka, St. Kitts and Nevis, St. Lucia, St. Vincent and Gren, Suriname, Swaziland, Sweden, Switzerland, Taiwan, Tajikistan, Tanzania, Thailand, Timor (East), Togo, Tonga, Trinidad and Tobago, Tunisia, Turkey, Turkmenistan, Tuvalu, Uganda, United Arab Emirates ,United Kingdom, Uruguay, Uzbekistan, Vanuatu, Venezuela, Vietnam, Yemen, Zambia, and Zimbabwe | 580101-002 |
| Intel Centrino Wireless-N 1000 802.11b/g/n 1x2<br><br>For use in Andorra, Antigua and Barbuda, Argentina, Aruba, Australia, Austria, Azerbaijan, Bahamas, Bahrain, Barbados, Belgium, Bermuda, Bolivia, Bosnia and Herzegovina, Brazil, Brunei, Bulgaria, Canada, the Cayman Islands, Chile, People's Republic of China, Colombia, Costa Rica, Croatia, Cyprus, the Czech Republic, Denmark, the Dominican Republic, Ecuador, Egypt, El Salvador, Estonia, Finland, France, French Guiana, Georgia, Germany, Ghana, Greece, Guadeloupe, Guam, Guatemala, Haiti, Honduras, Hong Kong, Hungary, Iceland, India, Indonesia, Ireland, Israel, Italy, Ivory Coast, Jamaica, Japan, Jordan, Kenya, Kuwait, Kyrgyzstan, Latvia, Lebanon, Liechtenstein, Lithuania, Luxembourg, Malawi, Malaysia, Malta, Martinique, Mauritius, Mexico, Monaco, Montenegro, Morocco, the Nether Antilles, Netherlands, New Zealand, Nicaragua, Nigeria, Norway, Oman, Pakistan, Panama, Paraguay, Peru, Philippines, Poland, Portugal, Puerto Rico, Qatar, Romania, San Marino, Saudi Arabia, Senegal, Singapore, Slovakia, Slovenia, South Africa, South Korea, Spain, Sri Lanka, Sweden, Switzerland, Taiwan, Tanzania, Thailand, Trinidad and Tobago, Turkey, Ukraine, United Arab Emirates, United Kingdom, Uruguay, the US Virgin Islands, the United States, Venezuela, and Vietnam | 593530-001 |

| Description | Spare part number |
|---|---|
| Realtek RTL8191SE 802.11b/g/n WiFi Adapter<br><br>For use in Albania, Algeria, Andorra, Angola, Antigua and Barbuda, Argentina, Armenia, Aruba, Australia, Austria, Azerbaijan, Bahamas Bahrain, Bangladesh, Barbados, Belarus, Belgium, Belize, Benin, Bermuda, Bhutan, Bolivia, Bosnia and Herzegovina, Botswana, Brazil, British Virgin Islands, Brunei, Bulgaria, Burkina Faso, Burundi, Cambodia, Cameroon, Canada, Cape Verde, Cayman Islands, Central African Republic, Chad, Chile, People's Republic of China, Colombia, Comoros, Congo, Costa Rica, Croatia, Cyprus, the Czech Republic, Denmark, Djibouti, Dominica, Dominican Republic, East Timor, Ecuador, Egypt, El Salvador, Equitorial Guinea, Eritrea, Estonia, Ethiopia, Fiji, Finland, France, French Guiana, Gabon, Gambia, Georgia, Germany, Ghana, Gibraltar, Greece Grenada, Guadeloupe, Guam, Guatemala, Guinea, Guinea-Bissa, Guyana, Haiti, Honduras, Hong Kong, Hungary, Iceland, India, Indonesia, Iraq, Ireland, Israel, Italy, Ivory Coast, Jamaica, Japan, Jordan, Kazakhstan, Kenya, Kiribati, Kuwait, Kyrgyzstan, Laos, Latvia, Lebanon, Lesotho, Liberia, Liechtenstein, Lithuania, Luxembourg Macedonia, Madagascar, Malawi, Malaysia, Maldives, Mali, Malta, Marshall Islands, Martinique, Mauritania, Mauritius, Mexico, Micronesia, Monaco, Mongolia, Montenegro, Morocco, Mozambique, Namibia, Nauru, Nepal, Nether Antilles, Netherlands, New Zealand Nicaragua, Niger, Nigeria, Norway, Oman, Pakistan, Palau, Panama, Papua New Guinea, Paraguay, Peru, Philippines, Poland, Portugal, Puerto Rico, Qatar, Republic of Moldova, Romania, Russia, Rwanda, Samoa, San Marino, Sao Tome and Principe, Saudi Arabia, Senegal, Serbia and Montenegro, Seychelles, Sierra Leone, Singapore, Slovakia, Slovenia, Solomon Islands, Somalia, South Africa, South Korea, Spain, Sri Lanka, St. Kitts and Nevis, St. Lucia, St. Vincent and Grenadine, Suriname, Swaziland, Sweden, Switzerland, Syria, Taiwan, Tajikistan, Tanzania, Thailand, Togo, Tonga, Trinidad and Tobago, Tunisia, Turkey, Turkmenistan, Tuvalu, Uganda, Ukraine, United Arab Emirates, the United Kingdom, Uruguay, the US Virgin Islands, the United States, Uzbekistan, Vanuatu, Venezuela, Vietnam, Yemen, Zaire, Zambia, and Zimbabwe | 593533-001 |
| Broadcom 4313AGN 802.11a/b/g/draft-n WiFi Adapter<br><br>For use in Afghanistan, Albania, Algeria, Andorra, Angola, Antigua and Barbuda, Argentina, Armenia, Aruba, Australia, Austria, Azerbaijan, Bahamas, Bahrain, Bangladesh, Barbados, Belarus, Belgium, Belize, Benin, Bermuda, Bhutan, Bolivia, Bosnia and Herzegovina, Botswana, Brazil, the British Virgin Islands, Brunei, Bulgaria, Burkina Faso, Burundi, Cambodia, Cameroon, Canada, Cape Verde, the Cayman Islands, Central African Republic, Chad, People's Republic of China, Colombia, Comoros, Congo, Costa Rica, Croatia, Cyprus, the Czech Republic, Denmark, Djibouti, Dominica, the Dominican Republic, East Timor, Ecuador, Egypt, El Salvador, Equitorial Guinea, Eritrea, Estonia, Ethiopia, Fiji, Finland, France, French Guiana, Gabon, Gambia, Georgia, Germany, Ghana, Gibraltar, Greece, Grenada, Guadeloupe, Guam, Guatemala, Guinea, Guinea-Bissa, Guyana, Haiti, Honduras, Hong Kong, Hungary, Iceland, India, Iraq, Ireland, Israel, Italy, Ivory Coast, Jamaica, Japan, Jordan, Kazakhstan, Kenya, Kiribati, Kuwait, Kyrgyzstan, Laos, Latvia, Lebanon, Lesotho, Liberia, Martinique, Liechtenstein, Lithuania, Luxembourg, Macedonia, Madagascar, Malawi, Malaysia, Maldives, Mali, Malta, Marshall Islands, Mauritania, Mauritius, Mexico, Micronesia, Monaco, Mongolia, Montenegro, Morocco, Mozambique, Namibia, Nauru, Nepal, the Nether Antilles, the Netherlands, New Zealand, Nicaragua, Niger, Nigeria, Norway, Oman, Pakistan, Palau, Panama, Papua New Guinea, Paraguay, Puerto Rico, Peru, Philippines, Poland, Portugal, Qatar, Republic of Moldova, Romania, Russia, Rwanda, Samoa, San Marino, Sao Tome and Principe, Saudi Arabia, Senegal, Serbia and Montenegro, Seychelles, Sierra Leone, Singapore, Slovakia, Slovenia, Solomon Islands, Somalia, South Africa, South Korea, Spain, Sri Lanka, St. Kitts and Nevis, St. Lucia, St. Vincent and the Grenadines, Suriname, Swaziland, Sweden, Switzerland, Syria, Taiwan, Tajikistan, Tanzania, Thailand, Togo, Tonga, Trinidad and Tobago, Tunisia, Turkey, Turkmenistan, Tuvalu, Uganda, Ukraine, the United Arab Emirates, the United Kingdom, Uruguay, the United States, the US Virgin Islands, Uzbekistan, Vanuatu, Venezuela, Vietnam, Yemen, Zaire, Zambia, and Zimbabwe | 593836-001 |

| Description | Spare part number |
|---|---|
| Broadcom 4313 802.11b/g/n 1×1 WiFi and 2070 Bluetooth 2.1+EDR Combo Adapter<br><br>For use in Afghanistan, Albania, Algeria, Andorra, Angola, Antigua and Barbuda, Argentina, Armenia, Aruba, Australia, Austria, Azerbaijan, Bahamas, Bahrain, Bangladesh, Barbados, Belarus, Belgium, Belize, Benin, Bermuda, Bhutan, Bolivia, Bosnia and Herzegovina, Botswana, Brazil, British Virgin Islands, Brunei, Bulgaria, Burkina Faso, Burundi, Cambodia, Cameroon, Canada, Cape Verde, the Cayman Islands, Central African Republic, Chad, Chile, the People's Republic of China, Colombia, Comoros, Congo, Costa Rica, Croatia, Cyprus, the Czech Republic, Denmark, Djibouti, Dominica, the Dominican Republic, East Timor, Ecuador, Egypt, El Salvador, Equitorial Guinea, Eritrea, Estonia, Ethiopia, Fiji, Finland, France, French Guiana, Gabon, Gambia, Georgia, Germany, Ghana, Gibraltar, Greece, Grenada, Guadeloupe, Guam, Guatemala, Guinea, Guinea-Bissa, Guyana, Haiti, Honduras, Hong Kong, Hungary, Iceland, India, Indonesia, Iraq, Ireland, Israel, Italy, Ivory Coast, Jamaica, Japan, Jordan, Kazakhstan, Kenya, Kiribati, Kuwait, Kyrgyzstan, Laos, Latvia, Lebanon, Lesotho, Liberia, Liechtenstein, Lithuania, Luxembourg, Macedonia, Madagascar, Malawi, Malaysia, Maldives, Mali, Malta, the Marshall Islands, Martinique, Mauritania, Mauritius, Mexico, Micronesia, Monaco, Mongolia, Montenegro, Morocco, Mozambique, Namibia, Nauru, Nepal, the Nether Antilles, the Netherlands, New Zealand, Nicaragua, Niger, Nigeria, Norway, Oman, Pakistan, Palau, Panama, Papua New Guinea, Paraguay, Peru, the Philippines, Poland, Portugal, Puerto Rico, the Republic of Moldova, Romania, Russia, Rwanda, Samoa, San Marino, Sao Tome and Principe, Saudi Arabia, Senegal, Serbia and Montenegro, Seychelles, Sierra Leone, Singapore, Slovakia, Slovenia, the Solomon Islands, Somalia, South Africa, South Korea, Spain, Sri Lanka, St. Kitts and Nevis, St. Lucia, St. Vincent and Grenadines, Suriname, Swaziland, Sweden, Switzerland, Syria, Taiwan, Tajikistan, Tanzania, Thailand, Togo, Tonga, Trinidad and Tobago, Tunisia, Turkey, Turkmenistan, Tuvalu, Uganda, Ukraine, the United Arab Emirates, the United Kingdom, Uruguay, the US Virgin Islands, the United States, Uzbekistan, Vanuatu, Venezuela, Vietnam, Yemen, Zaire, Zambia, and Zimbabwe | 600370–001 |
| Realink RT3090BC4 802.11b/g/n 11 WiFi and Bluetooth 2.1+EDR Combo Adapter<br><br>For use in Afghanistan, Albania, Algeria, Andorra, Angola, Antigua and Barbuda, Argentina, Armenia, Aruba, Australia, Austria, Azerbaijan, Bahamas, Bahrain, Barbados, Belarus, Belgium, Belize, Benin, Bermuda, Bhutan, Bolivia, Bosnia and Herzegovina, Botswana, Brazil, British Virgin Islands, Brunei, Bulgaria, Burkina Faso, Burundi, Cambodia, Cameroon, Canada, Cape Verde, the Cayman Islands, Central African Republic, Chad, Chile, the People's Republic of China, Colombia, Comoros, Congo, Costa Rica, Croatia, Cyprus, the Czech Republic, Denmark, Djibouti, Dominica, the Dominican Republic, East Timor, Ecuador, Egypt, El Salvador, Equitorial Guinea, Eritrea, Estonia, Ethiopia, Fiji, Finland, France, French Guiana, Gabon, Gambia, Georgia, Germany, Ghana, Gibraltar, Greece, Grenada, Guadeloupe, Guam, Guatemala, Guinea, Guinea-Bissa, Guyana, Haiti, Honduras, Hong Kong, Hungary, Iceland, India, Indonesia, Ireland, Israel, Italy, Ivory Coast, Jamaica, Japan, Jordan, Kazakhstan, Kenya, Kiribati, Kuwait, Kyrgyzstan, Laos, Latvia, Lebanon, Lesotho, Liberia, Liechtenstein, Lithuania, Luxembourg, Macedonia, Madagascar, Malawi, Malaysia, Maldives, Mali, Malta, the Marshall Islands, Martinique, Mauritania, Mauritius, Mexico, Micronesia, Monaco, Mongolia, Montenegro, Morocco, Mozambique, Namibia, Nauru, Nepal, the Nether Antilles, the Netherlands, New Zealand, Nicaragua, Niger, Nigeria, Norway, Oman, Pakistan, Palau, Panama, Papua New Guinea, Paraguay, Peru, the Philippines, Poland, Portugal, Puerto Rico, the Republic of Moldova, Romania, Russia, Rwanda, Samoa, San Marino, Sao Tome and Principe, Saudi Arabia, Senegal, Serbia and Montenegro, Seychelles, Sierra Leone, Singapore, Slovakia, Slovenia, the Solomon Islands, Somalia, South Africa, South Korea, Spain, Sri Lanka, St. Kitts and Nevis, St. Lucia, St. Vincent and Grenadines, Suriname, Swaziland, Sweden, Switzerland, Syria, Taiwan, Tajikistan, Tanzania, Thailand, Togo, Tonga, Trinidad and Tobago, Tunisia, Turkey, Turkmenistan, Tuvalu, Uganda, Ukraine, the United Arab Emirates, the United Kingdom, Uruguay, the US Virgin Islands, the United States, Uzbekistan, Vanuatu, Venezuela, Vietnam, Yemen, Zaire, Zambia, and Zimbabwe | 602992-001 |

Before removing the WLAN module, follow these steps:

1. Shut down the computer. If you are unsure whether the computer is off or in Hibernation, turn the computer on, and then shut it down through the operating system.
2. Disconnect all external devices connected to the computer.
3. Disconnect the power from the computer by first unplugging the power cord from the AC outlet and then unplugging the AC adapter from the computer.
4. Remove the battery (see Battery on page 41).
5. Remove the memory/wireless module compartment cover (see Memory module on page 42).

Remove the WLAN module:

1. Turn the computer upside down with the front toward you.
2. Disconnect the two WLAN antenna cables **(1)** from the WLAN module.
3. Remove the two Phillips PM2.0×4.0 screws **(2)** that secure the WLAN module to the computer. (The edge of the module opposite the slot rises away from the computer.)

4. Remove the WLAN module **(3)** by pulling it away from the slot at an angle.

△ **CAUTION:** To prevent an unresponsive system, replace the wireless module only with a wireless module authorized for use in the computer by the governmental agency that regulates wireless devices in your country or region. If you replace the module and then receive a warning message, remove the module to restore computer functionality, and then contact technical support through Help and Support.

**NOTE:** WLAN modules are designed with a notch **(4)** to prevent incorrect insertion into the WLAN module slot.

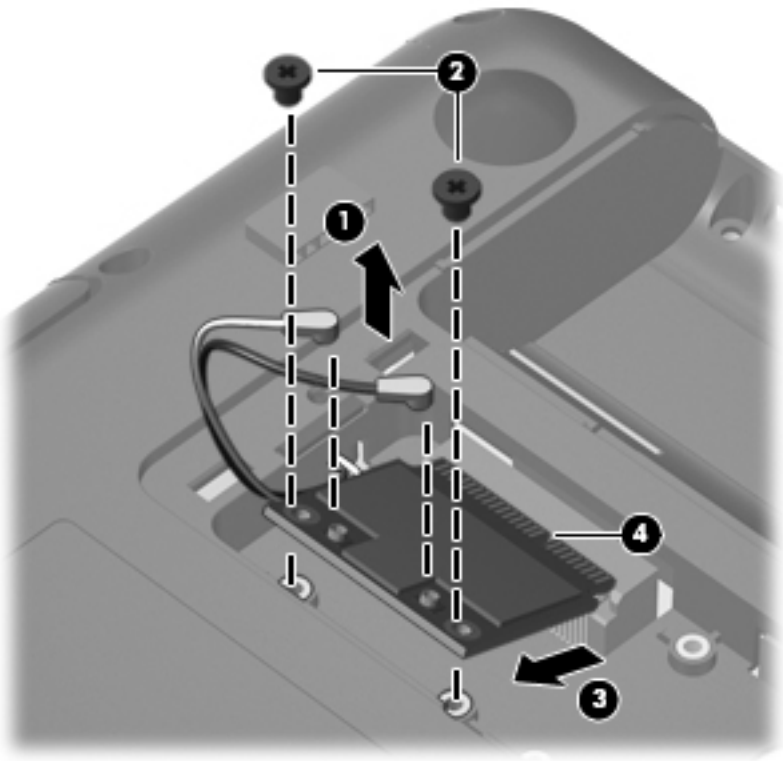


Reverse this procedure to install a WLAN module.

## Hard drive

**NOTE:** The hard drive cable is included in the Misc Cable Kit, spare part number 608009-001.

| Description | Spare part number |
|---|---|
| 640-GB, 5400 rpm, (requires hard drive hardware kit 608015-001) | 631160-001 |
| 500-GB, 7200 rpm, (includes hard drive mounting bracket) | 634919-001 |
| 320-GB, 7200 rpm, (includes hard drive mounting bracket) | 608013-001 |
| 250-GB, 7200 rpm, (includes hard drive mounting bracket) | 608012-001 |
| 160-GB, 7200 rpm, (includes hard drive mounting bracket) | 608011-001 |
| Hard drive hardware kit (includes screws and hard drive bracket) | 608015-001 |

Before removing the hard drive, follow these steps:

1. Shut down the computer. If you are unsure whether the computer is off or in Hibernation, turn the computer on, and then shut it down through the operating system.
2. Disconnect all external devices connected to the computer.
3. Disconnect the power from the computer by first unplugging the power cord from the AC outlet and then unplugging the AC adapter from the computer.
4. Remove the battery (see Battery on page 41).
5. Remove the memory/wireless module compartment cover (see Memory module on page 42)

Remove the hard drive:

1. Position the computer with the front toward you.
2. Remove the Phillips PM2.5×5.0 screw **(1)** that secures the hard drive cover to the computer.

3. Lift the hard drive cover **(2)** and remove it from the computer **(3)**. The hard drive cover is included in the Plastics Kit, spare part number 608023-001.

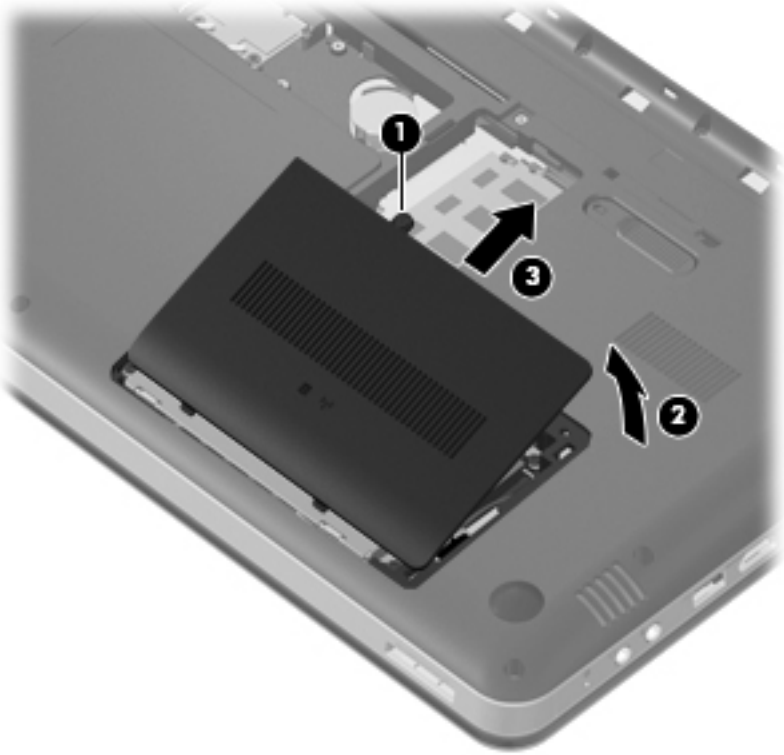


4. Disconnect the hard drive cable from the system board **(1)**.
5. Remove the four Phillips PM2.5×8.0 screws **(2)** that secure the hard drive to the computer.

6. Use the Mylar tab to lift the hard drive out of the hard drive bay **(3)**.

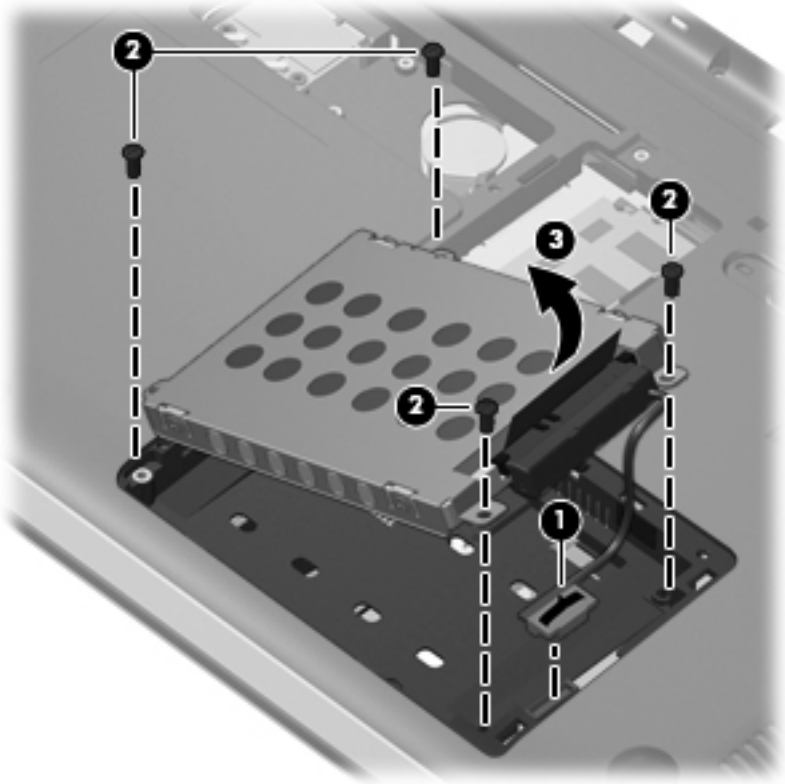

7. If it is necessary to replace the hard drive bracket, remove the four Phillips PM3.0×3.0 screws **(1)** that secure the hard drive bracket to the hard drive

8. Lift the bracket **(2)** straight up and off the hard drive.

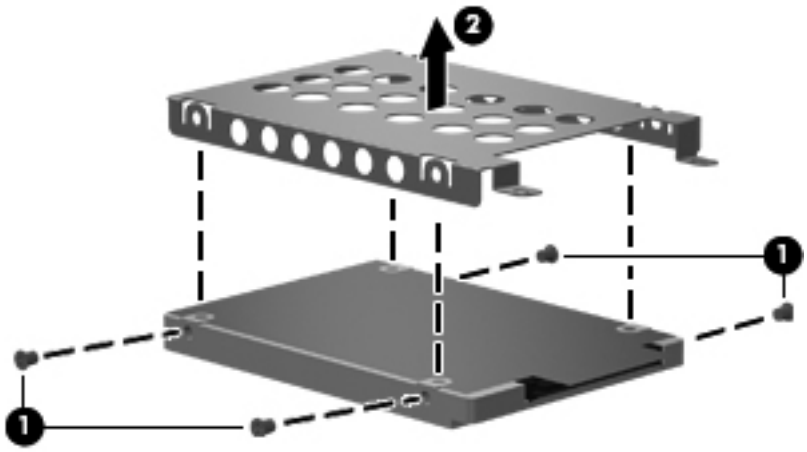

Reverse this procedure to install the hard drive.

# Optical drive

| Description | Spare part number |
|---|---|
| DVD±RW SuperMulti DL Drive with LightScribe | 608021-001 |
| Blu-ray ROM with LightScribe DVD±R/RW SuperMulti DL Drive | 608022-001 |

Before removing the optical drive, follow these steps:

1. Shut down the computer. If you are unsure whether the computer is off or in Hibernation, turn the computer on, and then shut it down through the operating system.
2. Disconnect all external devices connected to the computer.
3. Disconnect the power from the computer by first unplugging the power cord from the AC outlet and then unplugging the AC adapter from the computer.
4. Remove the battery (see Battery on page 41).
5. Remove the memory/wireless module compartment cover (see Memory module on page 42)
6. Remove the hard drive cover (see Hard drive on page 51)

Remove the optical drive:

1. Position the computer upside down with the front toward you.
2. Remove the Phillips PM2.5x5.0 screw **(1)** that secures the optical drive to the computer.
3. Use a flat-bladed screwdriver or similar tool to push the drive bracket to the left **(2)** to release the optical drive.
4. Remove the optical drive **(3)**.

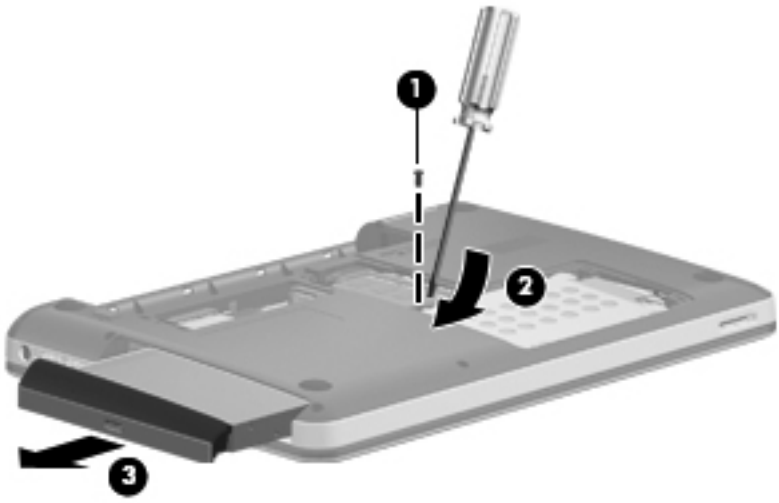


5. If it is necessary to replace the optical drive bracket, position the optical drive with the optical drive bracket toward you.

6. Remove the two Phillips PM2.0×3.0 screws **(1)** that secure the optical drive bracket to the optical drive.

7. Remove the optical drive bracket **(2)**.

Reverse the above procedure to reassemble and install the optical drive.

## Top cover

| Description | Spare part number |
|---|---|
| Top cover (includes Touchpad and bracket, button board, and cable) | 608030-001 |

Before removing the top cover, follow these steps:

1. Shut down the computer. If you are unsure whether the computer is off or in Hibernation, turn the computer on, and then shut it down through the operating system.
2. Disconnect all external devices connected to the computer.
3. Disconnect the power from the computer by first unplugging the power cord from the AC outlet and then unplugging the AC adapter from the computer.
4. Remove the following components:
   a. Battery (see Battery on page 41).
   b. Hard drive (see Hard drive on page 51).
   c. Optical drive (see Optical drive on page 54).

Remove the top cover:

1. Turn the computer upside down with the front toward you.
2. Remove the following screws that secure the top cover to the base enclosure:
   - **(1)** 5 Phillips PM2.0×4.0 screws
   - **(2)** 1 Phillips PM2.5×7.0 screw
   - **(3)** 2 Phillips PM2.5×5.0 screws

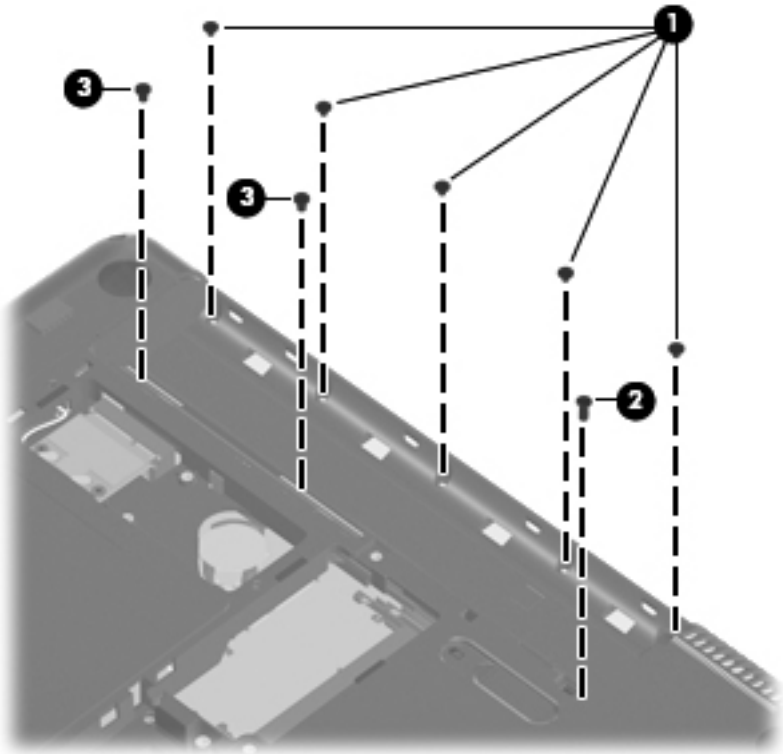


3. Remove the following screws that secure the top cover to the base enclosure:
   - **(1)** 2 rubber feet
   - **(2)** 2 Phillips PM2.0×3.0 screws (in optical drive bay)
   - **(3)** 2 Phillips PM2.5×5.0 screws (in hard drive bay)
   - **(4)** 10 Phillips PM2.5×8.0 screws (2 of the screws are under the feet)

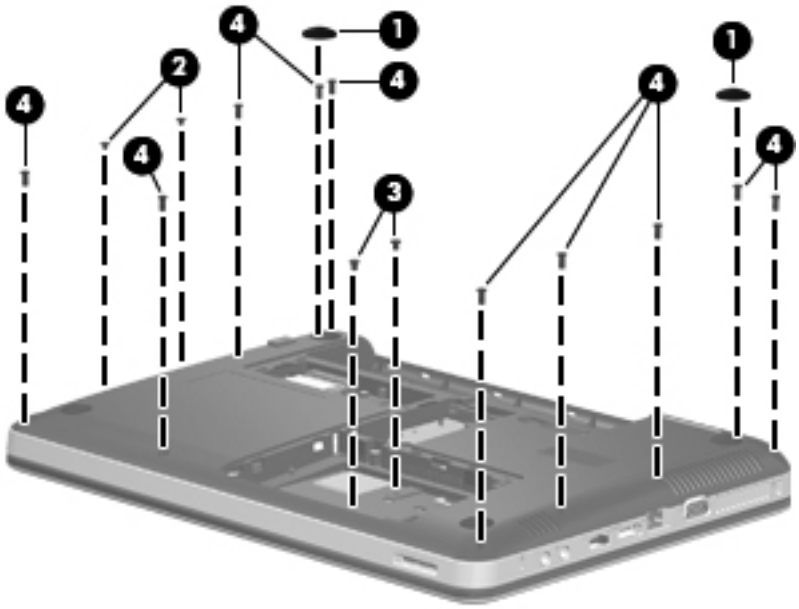

4. Turn the computer right-side up with the front toward you.
5. Open the computer as far as possible.
6. Pry up the edges of the top cover **(1)**, and then lift it up off the base enclosure **(2)** enough to gain access to the cables.

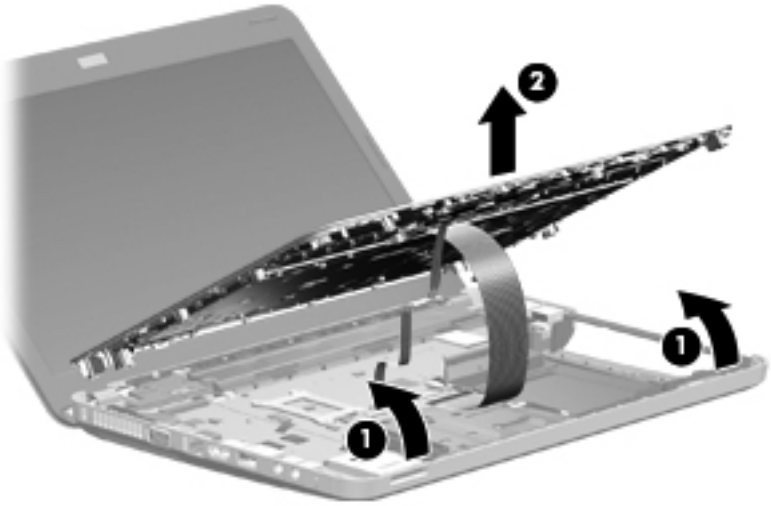

7. Release the ZIF connector to which the TouchPad cable is connected and disconnect the cable from the system board **(1)**.

8. Release the ZIF connector to which the TouchPad button board cable is connected and disconnect the cable from the system board **(2)**.

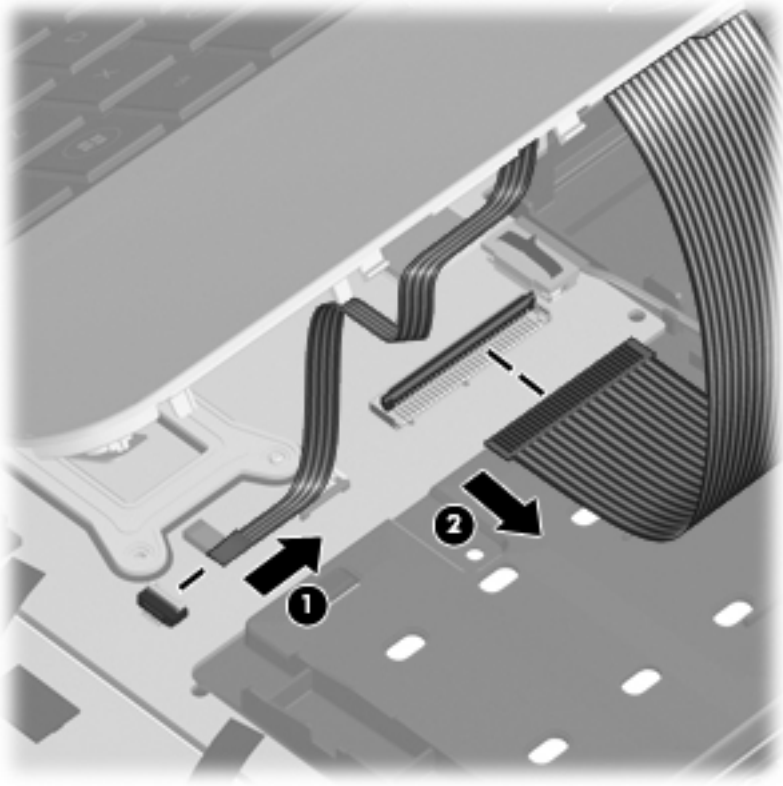

9. Remove the top cover from the base enclosure.

Reverse this procedure to install the top cover.

# Keyboard

| Description | Spare part number |
|---|---|
| Keyboard for use in the United States | 608018-001 |

Before removing the keyboard, follow these steps:

1. Shut down the computer. If you are unsure whether the computer is off or in Hibernation, turn the computer on, and then shut it down through the operating system.
2. Disconnect all external devices connected to the computer.
3. Disconnect the power from the computer by first unplugging the power cord from the AC outlet and then unplugging the AC adapter from the computer.
4. Remove the battery (see Battery on page 41).
5. Remove the memory/wireless compartment cover (see Memory module on page 42).
6. Remove the hard drive cover (see Hard drive on page 51).
7. Remove the top cover (see Top cover on page 55).

Remove the keyboard:

1. Turn the top cover upside down.

2. Slide the keyboard clips off the bottom of the keyboard.

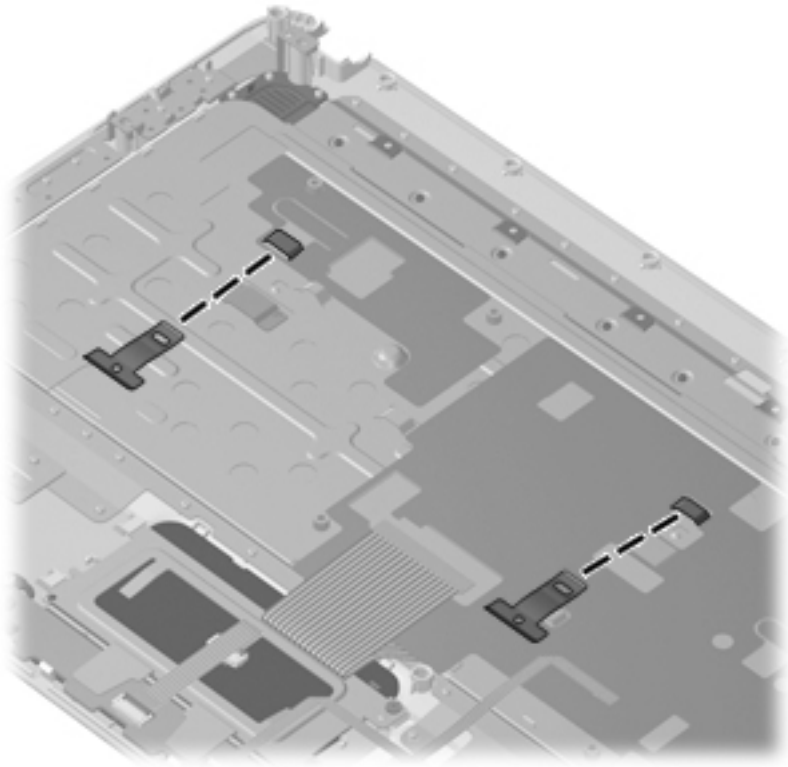

3. Pry to edges of the keyboard from the top cover **(1)**, and the lift the top of the keyboard up from the top cover **(2)**.
4. Slide the keyboard cable through the slot in the top cover **(3)**.

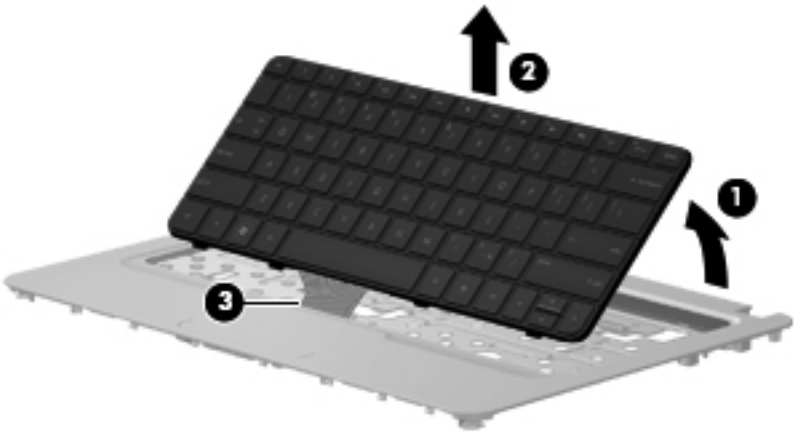


Reverse this procedure to install the keyboard.

## USB board

| Description | Spare part number |
|---|---|
| USB board (includes cable) | 603922–001 |

Before removing the USB board, follow these steps:

1. Shut down the computer. If you are unsure whether the computer is off or in Hibernation, turn the computer on, and then shut it down through the operating system.
2. Disconnect all external devices connected to the computer.
3. Disconnect the power from the computer by first unplugging the power cord from the AC outlet and then unplugging the AC adapter from the computer.
4. Remove the battery (see Battery on page 41).
5. Remove the following components:
   a. Hard drive (see Hard drive on page 51)
   b. Optical drive (see Optical drive on page 54)
   c. Top cover (see Top cover on page 55)

Remove the USB board:

1. Position the computer upright with the right side toward you.
2. If necessary, move the power connector cable aside to gain access to the USB board screw.
3. Disconnect the USB board cable **(1)** from the system board.
4. Remove the Phillips PM2.5×8.0 screw **(2)** that secures the USB board to the base enclosure.

5. Lift the USB board **(3)** straight up to remove it from the computer.

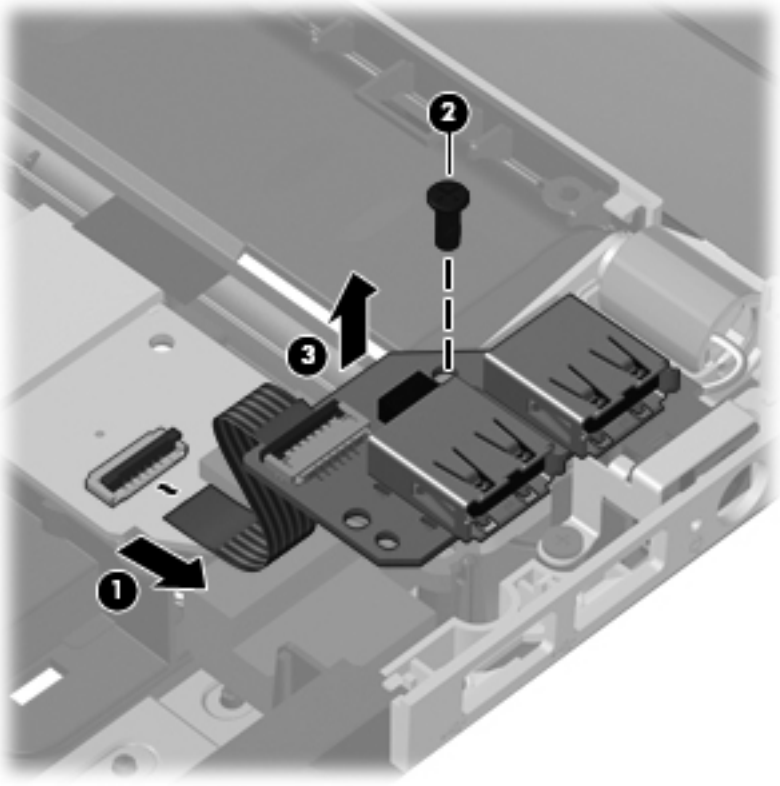

Reverse this procedure to install the USB board.

## Speaker assembly

| Description | Spare part number |
|---|---|
| Speaker assembly | 608027-001 |

Before removing the speaker assembly, follow these steps:

1. Shut down the computer. If you are unsure whether the computer is off or in Hibernation, turn the computer on, and then shut it down through the operating system.
2. Disconnect all external devices connected to the computer.
3. Disconnect the power from the computer by first unplugging the power cord from the AC outlet and then unplugging the AC adapter from the computer.
4. Remove the battery (see Battery on page 41).
5. Remove the following components:
   a. Optical drive (see Optical drive on page 54)
   b. Keyboard (see Keyboard on page 59)
   c. Top cover (see Top cover on page 55)

Remove the speaker assembly:

1. Position the computer upright with the front toward you.
2. Remove the tape that secures the cable to the system board **(1)**.
3. Disconnect the speaker cable from the system board **(2)**.
4. Remove the tape that secures the cable to the system board **(3)**.
5. Remove the Phillips PM2.5×5.0 screw **(4)** that secures the speaker assembly to the base enclosure.
6. Lift the left speaker **(5)** straight up to remove it from the base enclosure.

7. Lift the right speaker **(6)** straight up to remove it from the base enclosure.

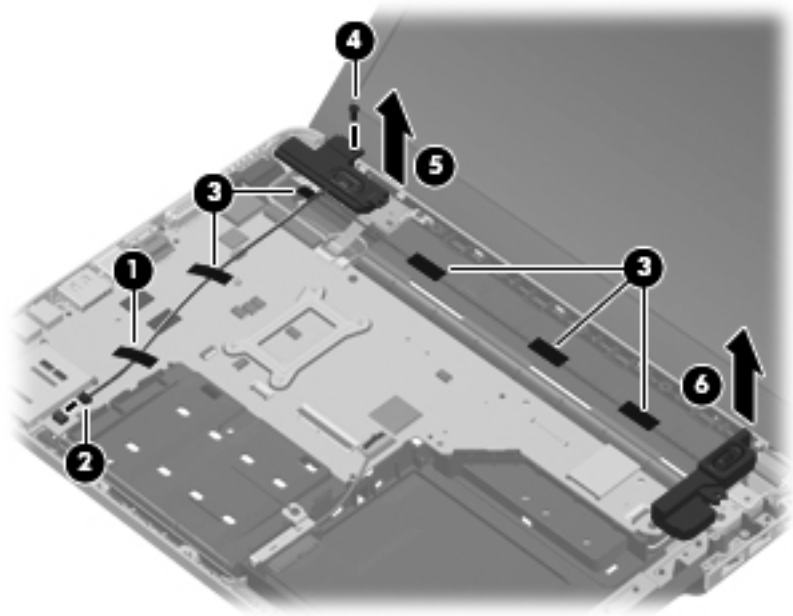


Reverse this procedure to install the speaker assembly.

## Bluetooth module

**NOTE:** The Bluetooth module cable is included in the Misc Cable Kit, spare part number 608009-001.

| Description | Spare part number |
|---|---|
| Bluetooth module | 537921-001 |

Before removing the Bluetooth module, follow these steps:

1. Shut down the computer. If you are unsure whether the computer is off or in Hibernation, turn the computer on, and then shut it down through the operating system.
2. Disconnect all external devices connected to the computer.
3. Disconnect the power from the computer by first unplugging the power cord from the AC outlet and then unplugging the AC adapter from the computer.
4. Remove the battery (see Battery on page 41).
5. Remove the following components:
   a. Hard drive (see Hard drive on page 51)
   b. Optical drive (see Optical drive on page 54)
   c. Top cover (see Top cover on page 55)

Remove the Bluetooth module:

1. Position the computer upright with the front toward you.
2. Lift the tape that secures the Bluetooth module cable to the system board **(1)**.
3. Disconnect the cable **(2)** from the system board.

4. Pull the clip that holds the Bluetooth module **(3)**, and then remove the module from the base enclosure **(4)**.

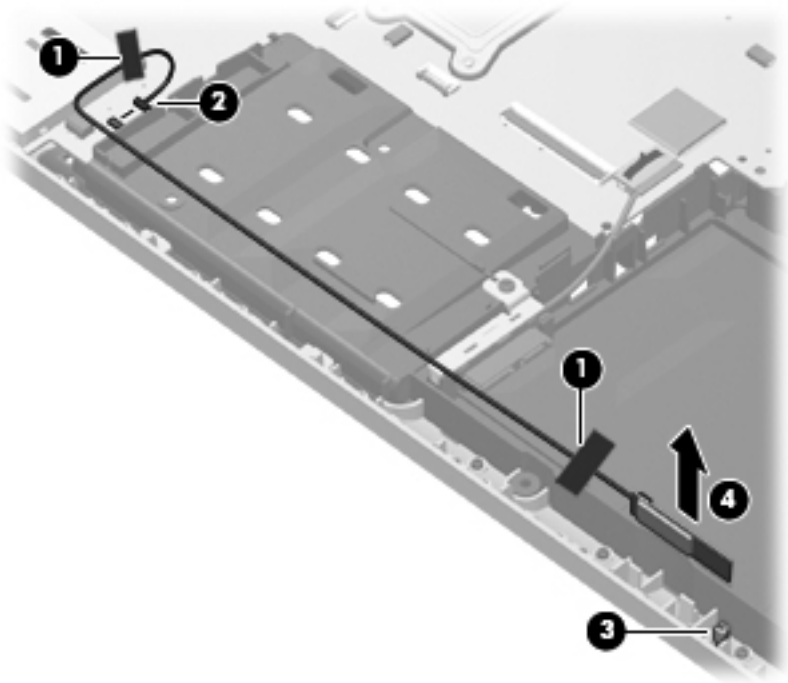

Reverse the above procedure to install the Bluetooth module.

## Power connector cable

| Description | Spare part number |
|---|---|
| Power connector cable (includes cable and connector) | 621884-001 |

Before removing the power connector cable, follow these steps:

1. Shut down the computer. If you are unsure whether the computer is off or in Hibernation, turn the computer on, and then shut it down through the operating system.
2. Disconnect all external devices connected to the computer.
3. Disconnect the power from the computer by first unplugging the power cord from the AC outlet and then unplugging the AC adapter from the computer.
4. Remove the battery (see Battery on page 41).
5. Remove the following components:
   a. Hard drive (see Hard drive on page 51)
   b. Optical drive (see Optical drive on page 54)
   c. Top cover (see Top cover on page 55))

Remove the power connector cable:

1. Turn the computer upright with the right side toward you.
2. Disconnect the power connector cable **(1)** from the system board.
3. Remove the Phillips PM2.0×4.0 screw **(2)** that secures the power connector cable to the base enclosure.
4. Remove the bracket from atop the connector **(3)**.

5. Remove the power connector **(4)** from the base enclosure.

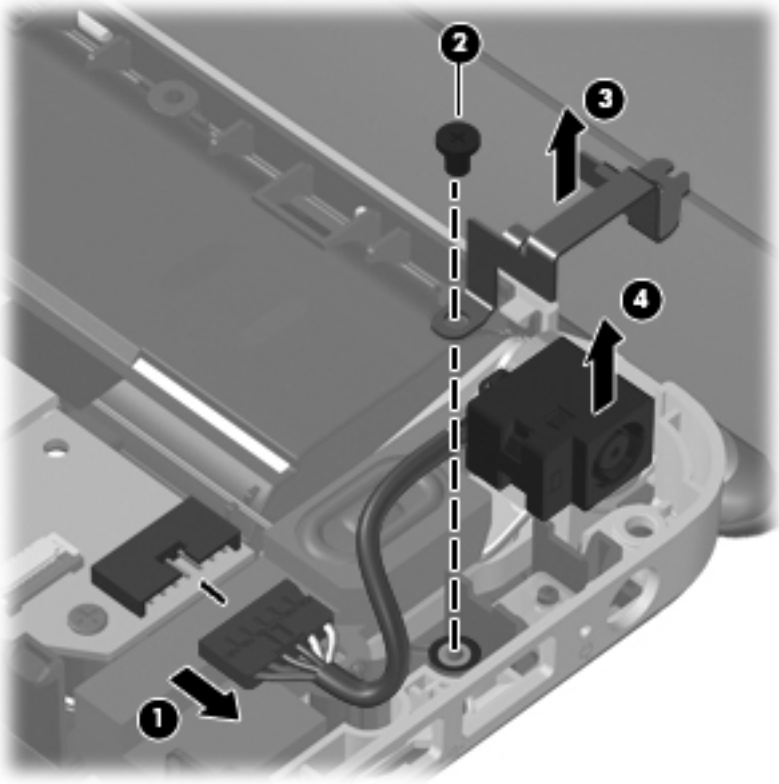


Reverse this procedure to install the power connector cable.

## Optical drive connector

| Description | Spare part number |
|---|---|
| Optical Drive Mounting Kit (includes SATA cable, cable bracket, optical drive bracket, and screws) | 608274-001 |

Before removing the optical drive connector, follow these steps:

1. Shut down the computer. If you are unsure whether the computer is off or in Hibernation, turn the computer on, and then shut it down through the operating system.
2. Disconnect all external devices connected to the computer.
3. Disconnect the power from the computer by first unplugging the power cord from the AC outlet and then unplugging the AC adapter from the computer.
4. Remove the battery (see Battery on page 41).
5. Remove the following components:
   a. Hard drive (see Hard drive on page 51)
   b. Optical drive (see Optical drive on page 54)
   c. Top cover (see Top cover on page 55)
   d. USB board (USB board on page 61).
   e. Speaker assembly(Speaker assembly on page 63).

Remove the optical drive connector:

1. Turn the computer upright with the right side toward you.
2. Remove the tape that secures the cable to the base enclosure **(1)**.
3. Disconnect the optical drive connector from the system board **(2)**.
4. Remove the Phillips PM2.0×3.0 screw **(3)** that secures the optical drive connector to the base enclosure.
5. Lift the bracket from the base enclosure **(4)**.

6. Remove the optical drive connector assembly **(5)** from the base enclosure.

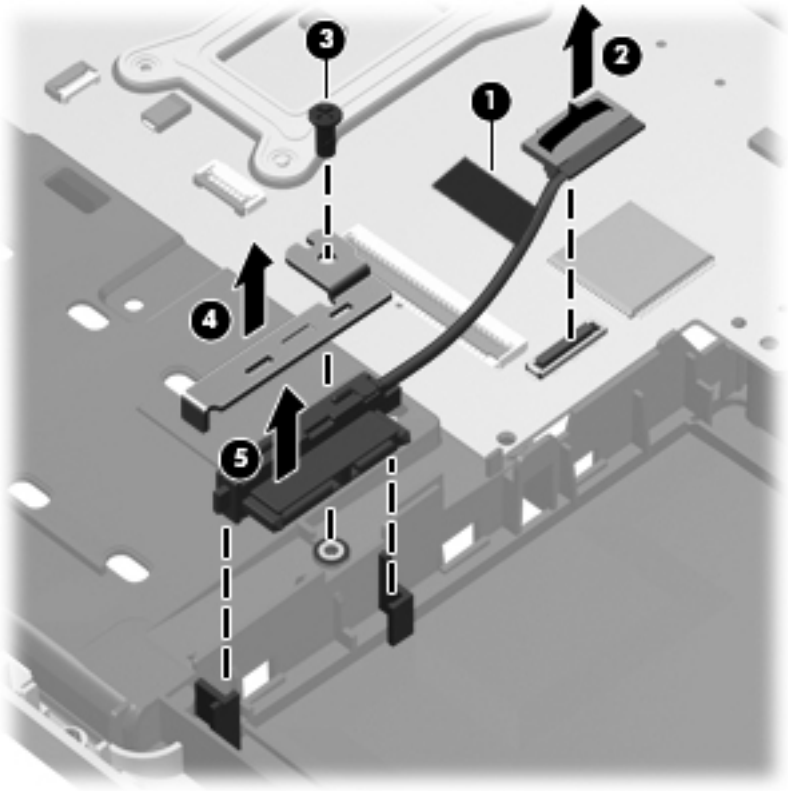


Reverse this procedure to install the optical drive connector.

# Power button board

| Description | Spare part number |
|---|---|
| **Power button board** (with cable and bracket) | 608276-001 |

Before removing the power button board, follow these steps:

1. Shut down the computer. If you are unsure whether the computer is off or in Hibernation, turn the computer on, and then shut it down through the operating system.
2. Disconnect all external devices connected to the computer.
3. Disconnect the power from the computer by first unplugging the power cord from the AC outlet and then unplugging the AC adapter from the computer.
4. Remove the battery (see Battery on page 41).
5. Remove the following components:
   a. Hard drive (see Hard drive on page 51)
   b. Optical drive (see Optical drive on page 54)
   c. Top cover (see Top cover on page 55)
   d. Speaker assembly (Speaker assembly on page 63).

Remove the power button board:

1. Turn the computer upright with the right side toward you.
2. Disconnect the cable from the system board **(1)**.
3. Remove the Phillips PM2.0×3.0 screw **(2)** that secures the power button board to the top cover.

4. Remove the power button board **(3)**.

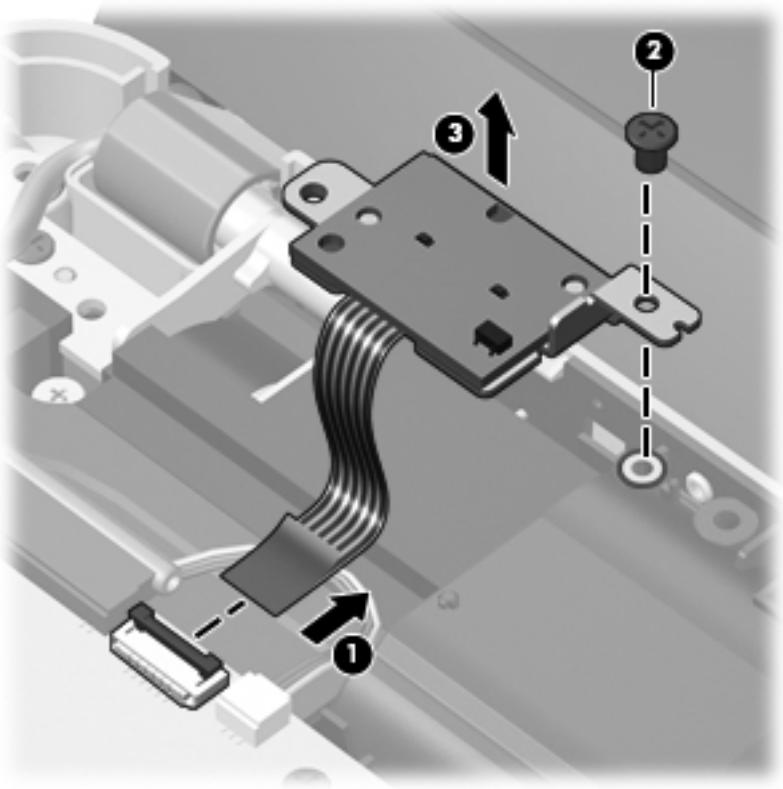

Reverse this procedure to install the power button board.

# Display assembly

| Description | Spare part number |
|---|---|
| **33.78 cm** (13.3-in) WXGA Brightview display assembly for use in Compaq Presario CQ32–branded computers | 608017-001 |
| **33.78 cm** (13.3-in) WXGA Brightview display assembly for use in HP G32–branded computers | 628920-001 |

Before removing the display assembly, follow these steps:

1. Shut down the computer. If you are unsure whether the computer is off or in Hibernation, turn the computer on, and then shut it down through the operating system.
2. Disconnect all external devices connected to the computer.
3. Disconnect the power from the computer by first unplugging the power cord from the AC outlet and then unplugging the AC adapter from the computer.
4. Remove the battery (see Battery on page 41).
5. Disconnect the wireless antenna cables from the WLAN module (see WLAN module on page 46).
6. Remove the following components:
   a. Optical drive (see Optical drive on page 54)
   b. WLAN module (see WLAN module on page 46)
   c. Top cover (see Top cover on page 55)
   d. USB board (USB board on page 61).

Remove the display assembly:

1. Turn the computer display-side up, with the front toward you.
2. Open the display as far as possible.
3. Disconnect the display panel cable **(1)** from the system board.
4. Remove the two Phillips PM2.5×8.0 screws **(2)** that secure the display assembly to the computer.

   △ **CAUTION:** Support the display assembly when removing the display screws in the following steps. Failure to support the display assembly can result in damage to the assembly and other components.

5. Remove the wireless antenna cables **(3)** from the hole and clips built into the base enclosure.

6. Remove the display assembly **(4)**.

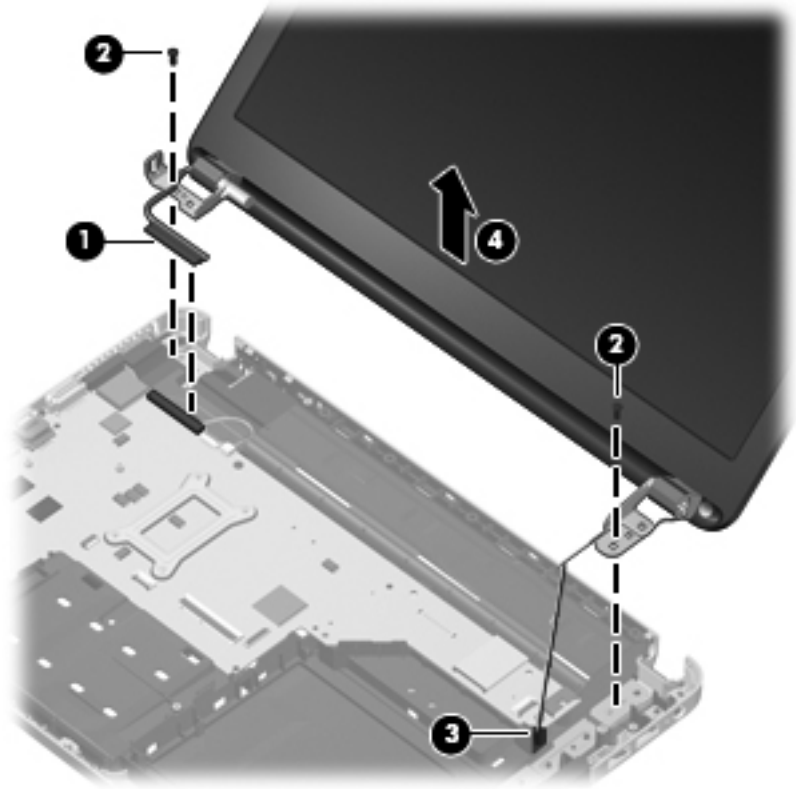


7. If it is necessary to replace any of the display assembly internal components, remove the following screw covers and screws.

   **(1)** Two Mylar screw covers on the display bezel bottom edge

   **(2)** Two Phillips PM2.5×4.0 screws

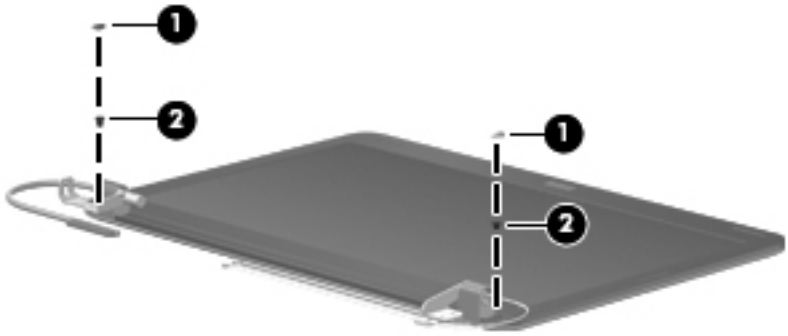


8. Flex the inside edge of the top **(1)**, the left and right sides **(2)**, and the bottom **(3)** of the display bezel until the bezel disengages from the display back cover.

9. Remove the display bezel **(4)**. The display bezel is available using spare part numbers 608020-001 (for use in Compaq Presario CQ32-branded computers), and 628918-001 (for use in HP G32-branded computers).

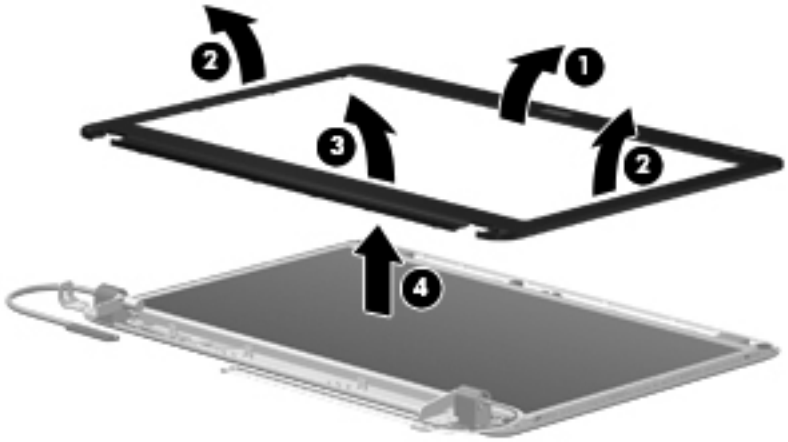

10. If it is necessary to replace the webcam module, remove the tape from the webcam module connector **(1)**, disconnect the webcam cable **(2)** from the module. and lift the webcam (left side first) to disengage the double-sided tape on the display back cover **(3)**. The webcam is available using spare part number 608031-001.

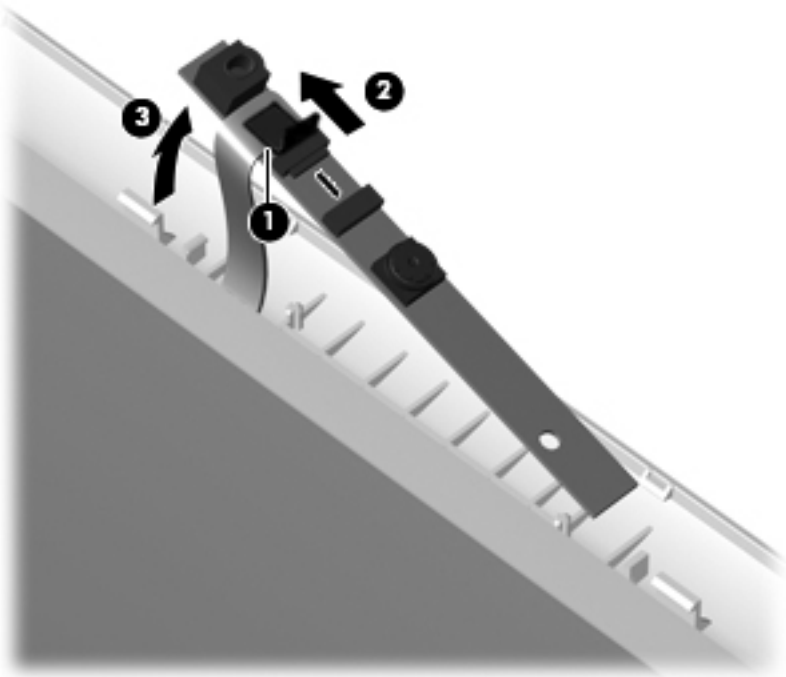

11. If it is necessary to replace the display panel, remove the two Phillips PM2.5×3.0 broadhead screws **(1)** and the two Phillips PM2.5×4.0 screws **(2)** that secure the display panel to the display enclosure.

12. Lift up the bottom of the panel **(3)**, and them remove the panel from the enclosure **(4)**. The display panel is available using the spare part number 608019-001.

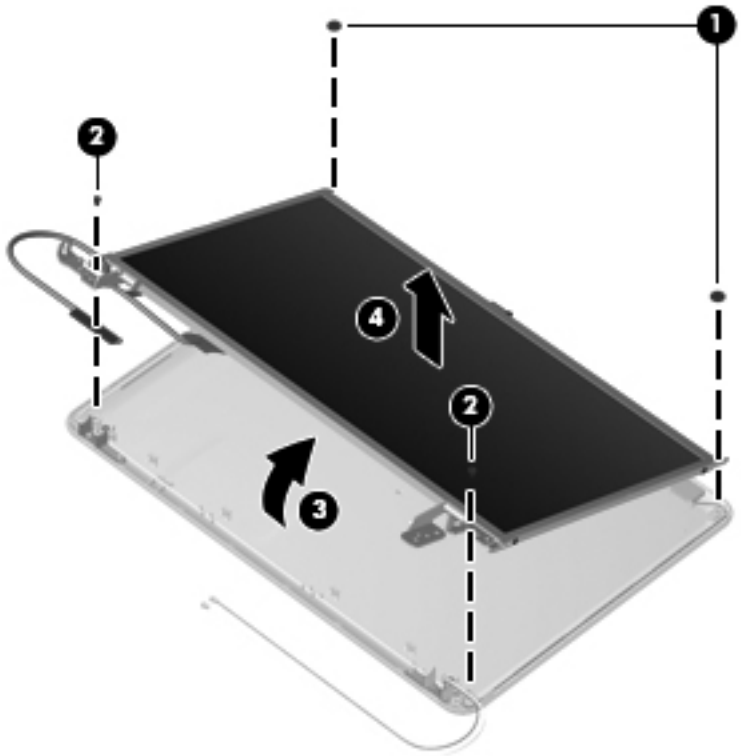


13. If it is necessary to replace the display cable, follow these steps:

    **a.** Turn the display panel upside down in front of you.

    **b.** Disengage the webcam cable from the glue securing it to the back of the display **(1)**.

    **c.** Peel back the tape that secures the display cable to the display **(2)**.

    **d.** Disconnect the display cable from the display **(3)**.

    **e.** Remove the display cable from the display **(4)**.

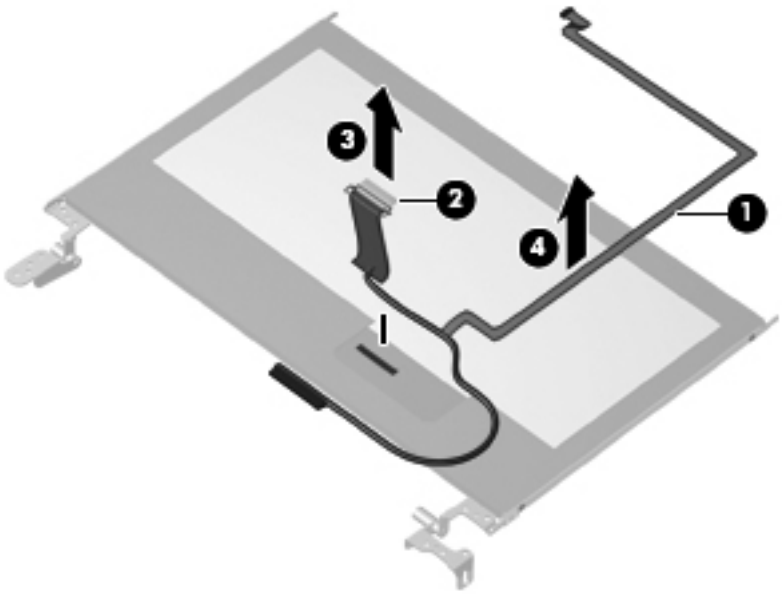

The display cable is available in the display cable kit, spare part number 608272-001.

14. If it is necessary to replace the display hinges, remove the four Phillips PM2.0×3.0 screws **(1)** that secure the hinges to the display.

15. Remove the display hinges **(2)** from the display. Display hinges are available using spare part number 608016-001.

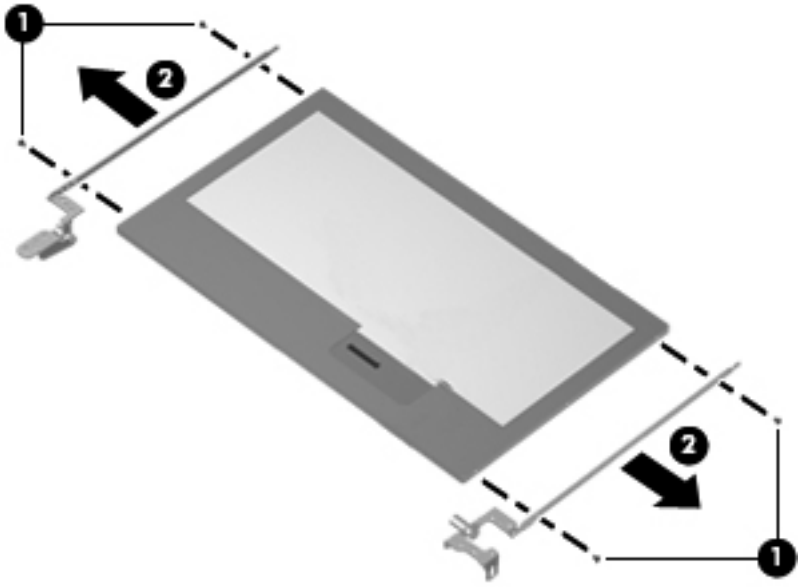

16. If it is necessary to replace the wireless antennas and cables, remove the adhesive strip **(1)** that secures each antenna to the display back cover.

17. Remove the antennas **(2)** from the clips **(3)** built into the display enclosure.

18. Remove the wireless antennas and cables **(4)** from the display enclosure. The wireless antennas and cables are included in the display cable kit, spare part number 608272-001.

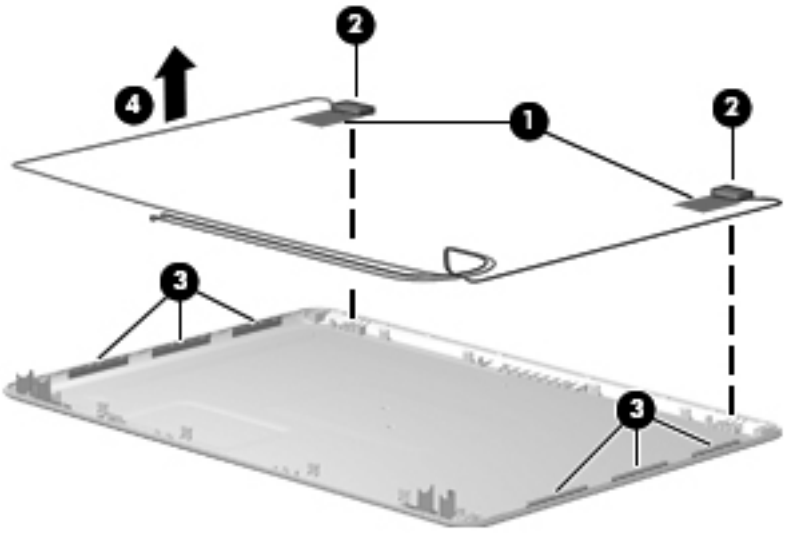


Reverse this procedure to reassemble and install the display assembly.

## System board

**NOTE:** All system board spare part kits include replacement thermal material.

| Description | Spare part number |
|---|---|
| System board with 512-MB of discrete graphics memory | 608029-001 |
| System board with 1-GB of discrete graphics memory | 615842-001 |
| System board Park XT with 1-GB of discrete graphics memory | 635226-001 |
| System board Park S3 Pro with 1-GB of discrete graphics memory | 635227-001 |

When replacing the system board, be sure that the following components are removed from the defective system board and installed on the replacement system board:

- RTC battery (see RTC battery on page 45)
- Memory modules (see Memory module on page 42)
- WLAN module (see WLAN module on page 46)
- Fan/heat sink assembly (see Fan/heat sink assembly on page 81)
- Processor (see Processor on page 84)

Before removing the system board, follow these steps:

1. Shut down the computer. If you are unsure whether the computer is off or in Hibernation, turn the computer on, and then shut it down through the operating system.
2. Disconnect all external devices connected to the computer.
3. Disconnect the power from the computer by first unplugging the power cord from the AC outlet and then unplugging the AC adapter from the computer.
4. Remove the battery (see Battery on page 41).
5. Remove the following components:
   a. Hard drive (see Hard drive on page 51)
   b. WLAN module (see WLAN module on page 46)
   c. Optical drive (see Optical drive on page 54)
   d. Top cover (see Top cover on page 55)
   e. Speaker assembly (see Speaker assembly on page 63)
   f. Display assembly (see Display assembly on page 73)
   g. USB board (see USB board on page 61)

**h.** Power connector cable (see Power connector cable on page 67)

**i.** Display (see Display assembly on page 73)

1. Turn the computer upright with the left side toward you.
2. Remove the two Phillips PM2.5×5.0 screws **(1)** that secure the system board to the computer.
3. Loosen the captive screw in the fan sink **(2)** that secures the system board.
4. Lift the right side of the system board **(3)**.
5. Release the system board by sliding it to the right at an angle **(4)** until the connectors on the left side of the system board clear the base enclosure, and then remove the system board.

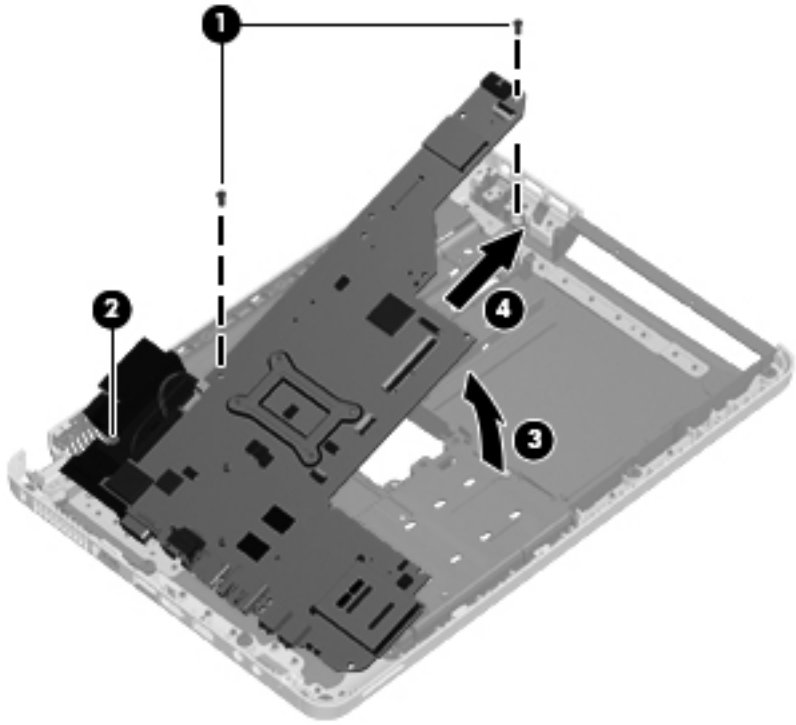


Reverse the preceding procedure to install the system board.

## Fan/heat sink assembly

**NOTE:** All fan/heat sink assembly spare part kits include replacement thermal material.

| Description | Spare part number |
|---|---|
| Fan/heat sink assembly | 608010-001 |

**NOTE:** To properly ventilate the computer, allow at least a **7.6-cm** (3-inch) clearance on the right side and rear panel of the computer. The computer uses an electric fan for ventilation. The fan is controlled by a temperature sensor and is designed to turn on automatically when high temperature conditions exist. These conditions are affected by high external temperatures, system power consumption, power management/battery conservation configurations, battery fast charging, and software requirements. Exhaust air is displaced through the ventilation grill located on the left side of the computer.

Before removing the fan/heat sink assembly, follow these steps:

1. Shut down the computer. If you are unsure whether the computer is off or in Hibernation, turn the computer on, and then shut it down through the operating system.
2. Disconnect all external devices connected to the computer.
3. Disconnect the power from the computer by first unplugging the power cord from the AC outlet and then unplugging the AC adapter from the computer.
4. Remove the battery (see Battery on page 41).
5. Remove the following components:
   a. Hard drive (see Hard drive on page 51)
   b. WLAN module (see WLAN module on page 46)
   c. Optical drive (see Optical drive on page 54)
   d. Top cover (see Top cover on page 55)
   e. Speaker assembly (see Speaker assembly on page 63)
   f. Power connector cable (see Power connector cable on page 67)
   g. USB board (see USB board on page 61)
   h. Display assembly (see Display assembly on page 73)
   i. System board (see System board on page 79)

Remove the fan/heat sink assembly:

1. Turn the system board upside down.

2. Disconnect the fan cable from the system board.

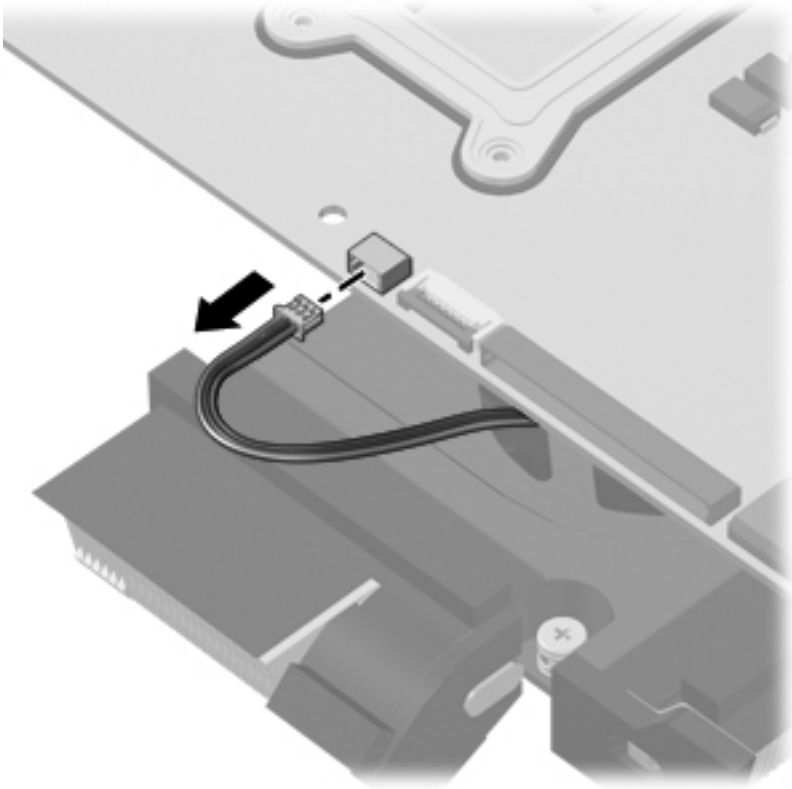

3. Follow the sequence embossed on heat sink to loosen the six captive screws **(1)** that secure the fan/heat sink assembly to the system board.

**NOTE:** Due to the adhesive quality of the thermal material located between the fan/heat sink assembly and system board components, it may be necessary to move the fan/heat sink assembly from side to side to detach the assembly.

4. Remove the fan/heat sink assembly from the system board **(2)**.

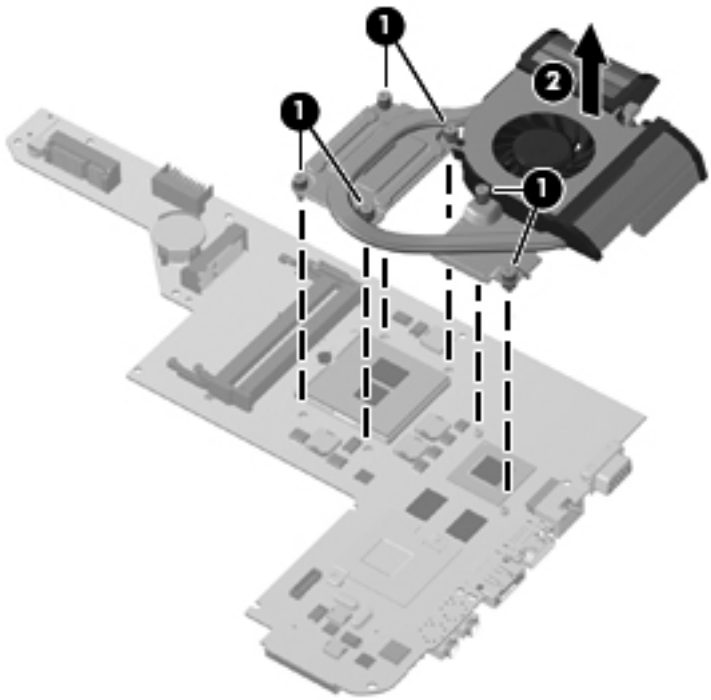

The thermal material must be thoroughly cleaned from the affected surfaces on the system board **(1)**, **(3)** and from the affected surfaces on the fan/heat sink assembly **(2)**, **(4)** each time the fan/heat sink assembly is removed. Thermal pads and thermal paste must be installed on all surfaces before the fan/heat sink assembly is reinstalled.

**NOTE:** Thermal pads and thermal paste are included with all fan/heat sink assembly, system board, and processor spare part kits.

The following illustration shows the locations for thermal material.

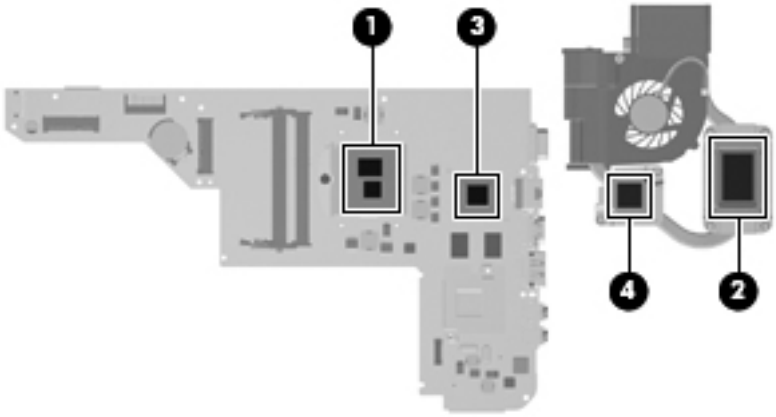

Reverse this procedure to install the fan/heat sink assembly.

## Processor

**NOTE:** All processor spare part kits include replacement thermal material.

| Description | Spare part number |
|---|---|
| Intel Core i5 580M Dual Core processor (2.66-GHz, 3-MB L3 cache) | 625825-001 |
| Intel Core i5 560M Dual Core processor (2.66-GHz, 3-MB L3 cache) | 625824-001 |
| Intel Core i5 540M Dual Core processor (2.53-GHz, 3-MB L3 cache) | 594188-002 |
| Intel Core i5 520M Dual Core processor (2.40-GHz, 3-MB L3 cache) | 594187-002 |
| Intel Core i5 480M Dual Core processor (2.66-GHz, 3-MB L3 cache) | 634693-001 |
| Intel Core i5 460M Dual Core processor (2.53-GHz, 3-MB L3 cache) | 626039-001 |
| Intel Core i5 450M Dual Core processor (2.40-GHz, 3-MB L3 cache) | 613585-001 |
| Intel Core i5 430M Dual Core processor (2.26-GHz, 3-MB L3 cache) | 597624-001 |
| Intel Core i3 390M Dual Core processor (2.66-GHz, 3-MB L3 cache) | 634692–001 |
| Intel Core i3 380M Dual Core processor (2.53-GHz, 3-MB L3 cache) | 625823-001 |
| Intel Core i3 370M Dual Core (2.40-GHz, 3-MB L3 cache) | 613584-001 |
| Intel Core i3 350M Dual Core (2.26-GHz, 3-MB L3 cache) | 597623-001 |
| Intel Pentium P6300 processor (2.66-GHz, 3-MB L3 cache) | 635500-001 |
| Intel Pentium P6200 processor (2.13-GHz, 3-MB L3 cache) | 625831-001 |
| Intel Pentium P6100 processor (2.0-GHz, 3-MB L3 cache) | 613587-001 |
| Intel Pentium P6000 (1.86-MHz, 3-MB L3 cache) | 613586-001 |

Before removing the processor, follow these steps:

1. Shut down the computer. If you are unsure whether the computer is off or in Hibernation, turn the computer on, and then shut it down through the operating system.
2. Disconnect all external devices connected to the computer.
3. Disconnect the power from the computer by first unplugging the power cord from the AC outlet and then unplugging the AC adapter from the computer.
4. Remove the battery (see Battery on page 41).
5. Remove the following components:
   a. Hard drive (see Hard drive on page 51)
   b. WLAN module (see WLAN module on page 46)
   c. Optical drive (see Optical drive on page 54)
   d. Top cover (see Top cover on page 55)

e. Speaker assembly (see Speaker assembly on page 63)

f. Power connector cable (see Power connector cable on page 67)

g. USB board (see USB board on page 61).

h. Display assembly (see Display assembly on page 73)

i. System board (see System board on page 79)

j. Fan/heat sink assembly (see Fan/heat sink assembly on page 81)

Remove the processor:

1. Turn the processor locking screw **(1)** one-half turn counterclockwise until you hear a click.
2. Lift the processor **(2)** straight up and remove it.

**NOTE:** The gold triangle **(3)** on the processor must be aligned with the triangle icon **(4)** embossed on the processor socket when you install the processor.

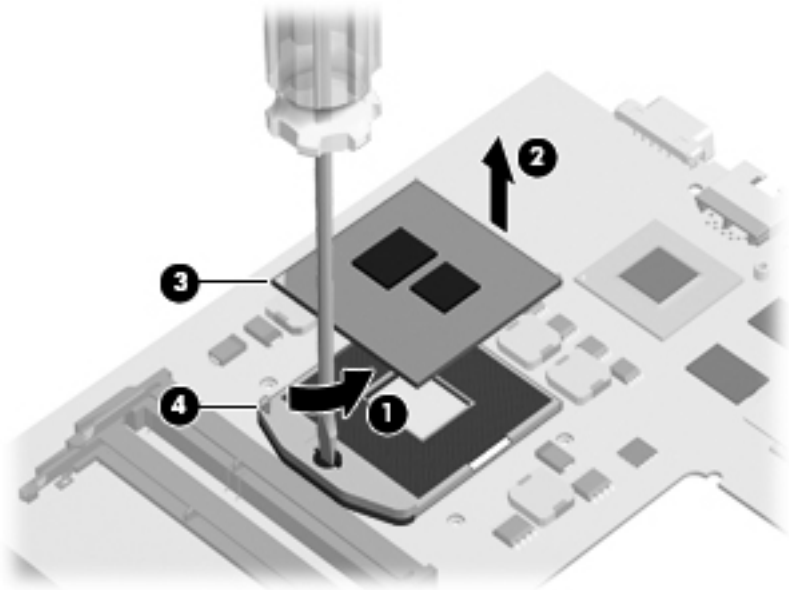


Reverse this procedure to install the processor.

# 5 Setup Utility (BIOS)

## Starting Setup Utility

Setup Utility is a ROM-based information and customization utility that can be used even when your Windows operating system is not working.

The utility reports information about the computer and provides settings for startup, security, and other preferences.

To start Setup Utility:

▲ Open Setup Utility by turning on or restarting the computer. While the “Press the ESC key for Startup Menu” message is displayed in the lower-left corner of the screen, press f10.

– or –

1. Open Setup Utility by turning on or restarting the computer. While the “Press the ESC key for Startup Menu” message is displayed in the lower-left corner of the screen, press esc.
2. When the Startup Menu is displayed, press f10.

# Using Setup Utility

## Changing the language of Setup Utility

The following procedure explains how to change the language of Setup Utility. If Setup Utility is not already running, begin at step 1. If Setup Utility is already running, begin at step 2.

1. Open Setup Utility by turning on or restarting the computer. While the "Press the ESC key for Startup Menu" message is displayed in the lower-left corner of the screen, press f10.

   – or –

   Open Setup Utility by turning on or restarting the computer. While the "Press the ESC key for Startup Menu" message is displayed in the lower-left corner of the screen, press esc. When the Startup Menu is displayed, press f10.

2. Use the arrow keys to select **System Configuration > Language**, and then press enter.
3. Use the arrow keys to select a language, and then press enter.
4. When a confirmation prompt with your language selected is displayed, press enter.
5. To save your change and exit Setup Utility, use the arrow keys to select **Exit > Exit Saving Changes**, and then press enter.

Your change goes into effect immediately.

## Navigating and selecting in Setup Utility

Because Setup Utility is not Windows based, it does not support the TouchPad. Navigation and selection are by keystroke.

- To choose a menu or a menu item, use the arrow keys.
- To choose an item in a list or to toggle a field, for example an Enable/Disable field, use either the arrow keys or f5 or f6.
- To select an item, press enter.
- To close a text box or return to the menu display, press esc.
- To display additional navigation and selection information while Setup Utility is open, press f1.

## Displaying system information

The following procedure explains how to display system information in Setup Utility. If Setup Utility is not open, begin at step 1. If Setup Utility is open, begin at step 2.

1. Open Setup Utility by turning on or restarting the computer. While the "Press the ESC key for Startup Menu" message is displayed in the lower-left corner of the screen, press f10.

   – or –

   Open Setup Utility by turning on or restarting the computer. While the "Press the ESC key for Startup Menu" message is displayed in the lower-left corner of the screen, press esc. When the Startup Menu is displayed, press f10.

2. Select the **Main** menu. System information such as the system time and date, and identification information about the computer is displayed.

3. To exit Setup Utility without changing any settings, use the arrow keys to select **Exit > Exit Discarding Changes**, and then press enter.

## Restoring default settings in Setup Utility

The following procedure explains how to restore Setup Utility default settings. If Setup Utility is not already running, begin at step 1. If Setup Utility is already running, begin at step 2.

1. Open Setup Utility by turning on or restarting the computer. While the "Press the ESC key for Startup Menu" message is displayed in the lower-left corner of the screen, press f10.

   – or –

   Open Setup Utility by turning on or restarting the computer. While the "Press the ESC key for Startup Menu" message is displayed in the lower-left corner of the screen, press esc. When the Startup Menu is displayed, press f10.

2. Use the arrow keys to select **Exit > Load Setup Defaults**, and then press enter.

3. When the Setup Confirmation is displayed, press enter.

4. To save your change and exit Setup Utility, use the arrow keys to select **Exit > Exit Saving Changes**, and then press enter.

Setup Utility default settings go into effect when the computer restarts.

**NOTE:** Your password, security, and language settings are not changed when you restore the factory default settings.

## Exiting Setup Utility

You can exit Setup Utility with or without saving changes.

- To exit Setup Utility and save your changes from the current session:

  If the Setup Utility menus are not visible, press esc to return to the menu display. Then use the arrow keys to select **Exit > Exit Saving Changes**, and then press enter.

- To exit Setup Utility without saving your changes from the current session:

  If the Setup Utility menus are not visible, press esc to return to the menu display. Then use the arrow keys to select **Exit > Exit Discarding Changes**, and then press enter.

After either choice, the computer restarts in Windows.

# Setup Utility menus

The menu tables in this section provide an overview of Setup Utility options.

**NOTE:** Some of the Setup Utility menu items listed in this chapter may not be supported by your computer.

## Main menu

| Select | To do this |
|---|---|
| System information | • View and change the system time and date.<br>• View identification information about the computer.<br>• View specification information about the processor, memory size, system BIOS, and keyboard controller version (select models only). |

## Security menu

| Select | To do this |
|---|---|
| Administrator password | Enter, change, or delete an administrator password. |
| Power-On Password | Enter, change, or delete a power-on password. |

## System Configuration menu

| Select | To do this |
|---|---|
| Language Support | Change the language of Setup Utility. |
| Button Sound (select models only) | Enable/disable the capacitive button tapping sound. |
| Virtualization Technology (select models only) | Enable/disable the processor Virtualization Technology. |
| Processor C6 State (select models only) | Enable/disable the processor C6 sleep state. |
| LAN Power Saving (select models only) | Enable/disable LAN Power Saving. When enabled, saves power when the computer is in DC mode. |
| Card Reader/1394 Power Saving (select models only) | Enable/disable Card Reader/1394 Power Saving. |
| Fan Always On | Enabled/disable Fan Always On. When enabled, the computer fan will always be on. |
| Action Keys Mode | Enable/disable Action Keys Mode. |
| Boot Options | Set the following boot options:<br>• POST hotkey delay (sec.)—Set the delay for the f1, f2, f9, f10, f11, and f12 functions of Setup Utility in intervals of 5 seconds each (0, 5, 10, 15, 20).<br>• CD-ROM Boot—Enable/disable boot from CD-ROM.<br>• Floppy Boot—Enable/disable boot from diskette.<br>• Internal Network Adapter Boot—Enable/disable boot from the internal network adapter.<br>• Boot Order—Set the boot order for:<br>◦ Notebook Hard Drive<br>◦ Internal CD/DVD ROM Drive<br>◦ USB Diskette on Key/USB Hard Disk<br>◦ USB CD/DVD ROM Drive<br>◦ USB Floppy<br>◦ Network Adapter |

## Diagnostics menu

| Select | To do this |
|---|---|
| Hard Disk Self Test | Run a comprehensive self-test on the hard drive.<br><br>**NOTE:** On models with two hard drives, this menu option is called the **Primary Hard Disk Self Test**. |
| Secondary Hard Disk Self Test (select models only) | Run a comprehensive self-test on a secondary hard drive. |
| Memory Test | Run a diagnostic test on the system memory. |

# 6 Specifications

## Computer specifications

| | |
|---|---|
| **Dimensions** | |
| Depth | **22.8** cm (8.98 in) |
| Width | **34.8 cm** (13.70 in) |
| Height (front to rear) | **2.5 to 3.2 cm** (0.98 to 1.26 in) |
| **Weight** (lowest weight configuration) | < **2.00 kg** (4.42 lbs) |
| **Input power** | |
| Operating voltage | 18.5 V dc @ 4.74 A – 90 W |
| Operating current | 4.74 A |
| **Temperature** | |
| Operating (not writing to optical disc) | **0°C to 35°C** (32°F to 95°F) |
| Operating (writing to optical disc) | **5°C to 35°C** (41°F to 95°F) |
| Nonoperating | **-20°C to 60°C** (-4°F to 140°F) |
| **Relative humidity** | |
| Operating | 10% to 90% |
| Nonoperating | 5% to 95% |
| **Maximum altitude** (unpressurized) | |
| Operating | **-15 m to 3,048 m** (-50 ft to 10,000 ft) |
| Nonoperating | **-15 m to 12,192 m** (-50 ft to 40,000 ft) |

**NOTE:** Applicable product safety standards specify thermal limits for plastic surfaces. The computer operates well within this range of temperatures.

# *33.78-cm* (13.3-in) display specifications

| | |
|---|---|
| **Dimensions** | |
| **Active diagonal size** | **33.78 cm** (13.30 in) |
| **Active area** | 293.38 x 165.02 |
| **Resolution** | 1366 × 768 (HD) |
| **Weight** | **350 g** (0.77 lbs) |
| **Contrast ratio** | 500:1 (typical) – BV<br>300:1 (typical) – AG |
| **Luminance** | 200 nits (typical) |
| **Luminance uniformity** | 1.4 (typical)<br>1.6 (max) |
| **Lifetime** (1/2 luminance) | 12,000 hours |
| **Backlight** | LED |
| **Response time** | 16 ms (typical) |
| **Surface treatment** | AG<br>BV |
| **Total power consumption** | 3.5 W |
| **Viewing angle** | SVA |

# Hard drive specifications

| | 500-GB* | 320-GB* | 250-GB* | 160-GB* |
|---|---|---|---|---|
| **Dimensions** | | | | |
| Height | 9.5 mm | | | |
| Width | 70 mm | | | |
| Weight | 101 g | | | |
| **Interface type** | SATA | | | |
| **Transfer rate** | 100 MB/sec | | | |
| **Security** | ATA security | | | |
| **Seek times** (typical read, including setting) | | | | |
| Single track | 1.0 ms | 1.5 ms | 2.0 ms | 2.0 ms |
| Average | 14.0 ms | 12.0 ms | 12.0 ms | 12.0 ms |
| Maximum | 22.0 ms | 22.0 ms | 22.0 ms | 22.0 ms |
| **Logical blocks** | 976,773,168 | 625,142,448 | 488,397,168 | 312,581,808 |
| **Disc rotational speed** | 7200 rpm | 7200 rpm | 7200 rpm | 7200 rpm |
| **Operating temperature** | **5°C to 55°C** (41°F to 131°F) | | | |

*1 GB = 1 billion bytes when referring to hard drive storage capacity. Actual accessible capacity is less. Actual drive specifications may differ slightly.

**NOTE:** Certain restrictions and exclusions apply. Contact technical support for details.

# DVD±RW SuperMulti DL Drive with LightScribe specifications

| | |
|---|---|
| **Applicable disc** | |
| Read | CD-DA, CD+(E)G, CD-MIDI, CD-TEXT, CD-ROM, CD-ROM XA, MIXED MODE CD, CD-I, CD-I Bridge (Photo-CD, Video CD), Multisession CD (Photo-CD, CD-EXTRA, Portfolio, CD-R, CD-RW), CD-R, CD-RW, DVD-ROM (DVD-5, DVD-9, DVD-10, DVD-18), DVD-R, DVD-RW, DVD+R, DVD+RW, DVD-RAM |
| Write | CD-R and CD-RW, DVD+R, DVD+RW, DVD-R, DVD-RW, DVD-RAM |
| **Random access time** | |
| DVD | < 230 ms |
| CD | < 175 ms |
| **Cache buffer** | 2 MB |
| **Data transfer rate** | |
| 24X CD-ROM | 3,600 KB/sec |
| 8X DVD-ROM | 10,800 KB/sec |
| 24X CD-R | 3,600 KB/sec |
| 16X CD-RW | 2,400 KB/sec |
| 8X DVD+R | 10,800 KB/sec |
| 4X DVD+RW | 5,400 KB/sec |
| 8X DVD-R | 10,800 KB/sec |
| 4X DVD-RW | 5,400 KB/sec |
| 2.4X DVD+R(9) | 2,700 KB/sec |
| 5X DVD-RAM | 6,750 KB/sec |
| **Transfer mode** | Multiword DMA Mode |

# Blu-ray ROM with LightScribe DVD±R/RW SuperMulti DL Drive

| Applicable disc | Read: | Write: | |
|---|---|---|---|
| | CD-DA, CD+(E)G, CD-MIDI, CDTEXT, CD-ROM, CD-ROM XA, MIXED MODE CD, CD-I, CD-I Bridge (Photo-CD, Video CD), Multisession CD (Photo-CD, CD-EXTRA, Portfolio, CD-R, CD-RW), CD-R, CD-RW, DVDROM (DVD-5, DVD-9, DVD-10, DVD-18), DVD-R, DVD-RW, DVD+R, DVD+RW, DVD-RAM, HD-ROM (Single Layer), HD-ROM (Dual Layer), HD DVD-R, HD DVD-R for Dual Layer, HD DVD-RW | CD-R and CD-RW DVD+R, DVD+R(9), DVD+RW, DVD-R, DVD-R(9),DVD-RW, DVD-RAM | |
| **Access time** | **CD** | **DVD** | **HD** |
| Random | 170 ms | 170 ms | 230 ms |
| **Cache buffer** | 8 MB | | |
| **Data transfer rate** | | | |
| 24X CD-ROM | 3,600 KB/sec | | |
| 8X DVD | 10,800 KB/sec | | |
| 24X CD-R | 3,600 KB/sec | | |
| 16X CD-RW | 2,400 KB/sec | | |
| 8X DVD+R | 10,800 KB/sec | | |
| 4X DVD+RW | 5,400 KB/sec | | |
| 8X DVD-R | 10,800 KB/sec | | |
| 4X DVD-RW | 5,400 KB/sec | | |
| 2.4X DVD+R(9) | 2,700 KB/sec | | |
| 5X DVD-RAM | 6,750 KB/sec | | |
| 1X BD-ROM | 4,500 KB/sec | | |
| 1X BD-R read | 4,500 KB/sec | | |
| 1X BD-RE read | 4,500 KB/sec | | |
| **Transfer mode** | Multiword DMA Mode | | |

# System resource specifications

You can use Device Manager to get a graphical view of the system resources that control how the devices work on the computer. System resources you can access from Device Manager are direct memory access (DMA) channels, input/output (I/O) ports, interrupt request (IRQ) lines, and memory addresses.

If two devices require the same resource and create a device conflict, you can manually change the resource settings in Device Manager to be sure each setting is unique.

△ **CAUTION:** Improperly changing resource settings can disable your hardware and cause your computer to malfunction or become inoperable. Only users who have expert knowledge of computer hardware and hardware configurations should change resource settings.

To view resource settings in Windows 7:

1. Select **Start > Computer**.
2. Click **System properties** near the top of the Computer folder.
3. On the left, click **Device Manager**.
4. On the **View** menu, click one of the following:
   - **Resources by type**
   - **Resources by connection**

# 7 Backup and recovery

Recovery after a system failure is as complete as your most current backup. HP recommends that you create recovery discs immediately after software setup. As you add new software and data files, you should continue to back up your system on a regular basis to maintain a reasonably current backup.

Tools provided by the operating system and HP Recovery Manager software are designed to help you with the following tasks for safeguarding your information and restoring it in case of a system failure:

- Creating a set of recovery discs (Recovery Manager software feature). Recovery discs are used to start up (boot) your computer and restore the operating system and software programs to factory settings in case of system failure or instability.
- Backing up your information regularly to protect your important system files.
- Creating system restore points (operating system feature). System restore points allow you to reverse undesirable changes to your computer by restoring the computer to an earlier state.
- Recovering a program or driver (Recovery Manager software feature). This feature helps you reinstall a program or driver without performing a full system recovery.
- Performing a full system recovery (Recovery Manager software feature). With Recovery Manager, you can recover your full factory image if you experience system failure or instability. Recovery Manager works from a dedicated recovery partition (select models only) on the hard drive or from recovery discs you create.

**NOTE:** Computers with a solid-state drive (SSD) may not have a recovery partition. Recovery discs have been included for computers that do not have a partition. Use these discs to recover your operating system and software. To check for the presence of a recovery partition, select **Start**, right-click **Computer**, click **Manage**, and then click **Disk Management**. If the partition is present, an HP Recovery drive is listed in the window.

# Creating recovery discs

HP recommends that you create recovery discs to be sure that you can restore your system to its original factory state if you experience serious system failure or instability. Create these discs after setting up the computer for the first time.

Handle these discs carefully and keep them in a safe place. The software allows the creation of only one set of recovery discs.

**NOTE:** You can use an optional external optical drive (purchased separately) to create recovery discs, or you can purchase recovery discs for your computer from the HP Web site.

Note the following guidelines before creating recovery discs:

**NOTE:** The external hard drive must be connected to a USB port on the computer, not to a USB port on an external device such as a hub.

- You will need high-quality DVD-R, DVD+R, BD-R (writable Blu-ray), or CD-R discs. All these discs are purchased separately. DVDs and BDs have a much higher capacity than CDs. If you use CDs, up to 20 discs may be required, whereas only a few DVDs or BDs are required.

  **NOTE:** Read-write discs, such as CD-RW, DVD±RW, double-layer DVD±R, and BD-RE (rewritable Blu-ray) discs, are not compatible with the Recovery Manager software.

- The computer must be connected to AC power during this process.
- Only one set of recovery discs can be created per computer.
- Number each disc before inserting it into the optical drive.
- If necessary, you can exit the program before you have finished creating the recovery discs. The next time you open Recovery Manager, you will be prompted to continue the disc creation process.

To create a set of recovery discs:

1. Select **Start > All Programs > Recovery Manager > Recovery Disk Creation**.
2. Follow the on-screen instructions.

# Backing up your information

As you add new software and data files, you should back up your system on a regular basis to maintain a reasonably current backup. Back up your system at the following times:

- At regularly scheduled times

  **NOTE:** Set reminders to back up your information periodically.

- Before the computer is repaired or restored
- Before you add or modify hardware or software

Note the following when backing up:

- Create system restore points using the Windows® System Restore feature, and periodically copy them to disc.
- Store personal files in the Documents library and back up this folder periodically.
- Back up templates stored in their associated programs.
- Save customized settings in a window, toolbar, or menu bar by taking a screen shot of your settings. The screen shot can be a time-saver if you have to reset your preferences.

  To copy the screen and paste it into a word-processing document, follow these steps:

  1. Display the screen.
  2. Copy the screen:

     To copy only the active window, press alt+prt sc.

     To copy the entire screen, press prt sc.
  3. Open a word-processing document, and then select **Edit > Paste**.
  4. Save the document.

- You can back up your information to an optional external hard drive, a network drive, or discs.
- When backing up to discs, use any of the following types of discs (purchased separately): CD-R, CD-RW, DVD+R, DVD-R, or DVD±RW. The discs you use will depend on the type of optical drive installed in your computer.

  **NOTE:** DVDs store more information than CDs, so using them for backup reduces the number of recovery discs required.

- When backing up to discs, number each disc before inserting it into the optical drive of the computer.

## Using Windows Backup and Restore

To create a backup using Windows Backup and Restore, follow these steps:

**NOTE:** Be sure that the computer is connected to AC power before you start the backup process.

**NOTE:** The backup process may take over an hour, depending on file size and the speed of the computer.

1. Select **Start > All Programs > Maintenance > Backup and Restore**.
2. Follow the on-screen instructions to set up and create a backup.

**NOTE:** Windows includes the User Account Control feature to improve the security of your computer. You may be prompted for your permission or password for tasks such as installing software, running utilities, or changing Windows settings. Refer to Help and Support for more information.

## Using system restore points

When you back up your system, you are creating a system restore point. A system restore point allows you to save and name a snapshot of your hard drive at a specific point in time. You can then recover back to that point if you want to reverse subsequent changes made to your system.

**NOTE:** Recovering to an earlier restore point does not affect data files saved or e-mails created since the last restore point.

You also can create additional restore points to provide increased protection for your system files and settings.

### When to create restore points

- Before you add or extensively modify software or hardware
- Periodically, whenever the system is performing optimally

**NOTE:** If you revert to a restore point and then change your mind, you can reverse the restoration.

### Create a system restore point

1. Select **Start > Control Panel > System and Security > System**.
2. In the left pane, click **System Protection**.
3. Click the **System Protection** tab.
4. Under **Protection Settings**, select the disk for which you want to create a restore point.
5. Click **Create**.
6. Follow the on-screen instructions.

## Restore to a previous date and time

To revert to a restore point (created at a previous date and time), when the computer was functioning optimally, follow these steps:

1. Select **Start > Control Panel > System and Security > System**.
2. In the left pane, click **System protection**.
3. Click the **System Protection** tab.
4. Click **System Restore**.
5. Follow the on-screen instructions.

# Performing a recovery

**NOTE:** You can recover only files that you have previously backed up. HP recommends that you use HP Recovery Manager to create a set of recovery discs (entire drive backup) as soon as you set up your computer.

Recovery Manager software allows you to repair or restore the system if you experience system failure or instability. Recovery Manager works from recovery discs or from a dedicated recovery partition (select models only) on the hard drive. However, if your computer includes a solid-state drive (SSD), you may not have a recovery partition. If that is the case, recovery discs have been included with your computer. Use these discs to recover your operating system and software.

**NOTE:** Windows has its own built-in repair features, such as System Restore. If you have not already tried these features, try them before using Recovery Manager.

**NOTE:** Recovery Manager recovers only software that was preinstalled at the factory. Software not provided with this computer must be downloaded from the manufacturer's Web site or reinstalled from the disc provided by the manufacturer.

## Recovering from the recovery discs

To restore the system from the recovery discs:

1. Back up all personal files.
2. Insert the first recovery disc into the optical drive and restart the computer.
3. Follow the on-screen instructions.

## Recovering from the dedicated recovery partition (select models only)

**NOTE:** Computers with an SSD may not have a recovery partition. If the computer does not have a recovery partition, you will not be able to recover using this procedure. Recovery discs have been included for computers that do not have a partition. Use these discs to recover your operating system and software.

On some models, you can perform a recovery from the partition on the hard drive, accessed by pressing either the Start button or f11. This restores the computer to its factory condition.

To restore the system from the partition, follow these steps:

1. Access Recovery Manager in either of the following ways:
   - Select **Start > All Programs > Recovery Manager > Recovery Manager**.

     – or –
   - Turn on or restart the computer, and then press esc while the “Press the ESC key for Startup Menu” message is displayed at the bottom of the screen. Then, press f11 while the “Press <F11> for recovery” message is displayed on the screen.
2. Click **System Recovery** in the **Recovery Manager** window.
3. Follow the on-screen instructions.

# 8 Connector pin assignments

## Audio-out (headphone)

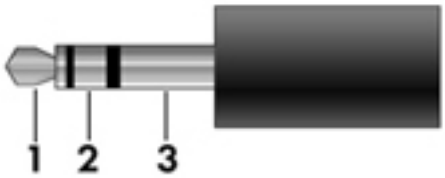


| Pin | Signal |
|---|---|
| 1 | Audio out, left channel |
| 2 | Audio out, right channel |
| 3 | Ground |

## Audio-in (microphone)

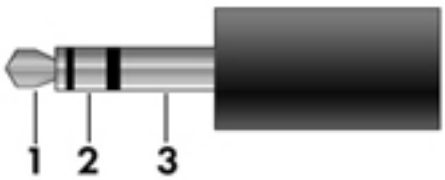


| Pin | Signal |
|---|---|
| 1 | Audio signal in |
| 2 | Audio signal in |
| 3 | Ground |

# External monitor

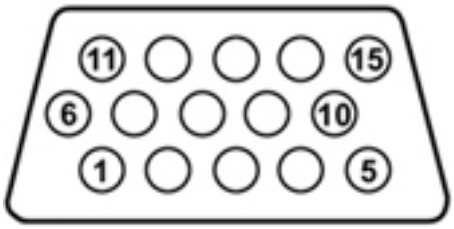


| Pin | Signal |
|---|---|
| 1 | Red analog |
| 2 | Green analog |
| 3 | Blue analog |
| 4 | Not connected |
| 5 | Ground |
| 6 | Ground analog |
| 7 | Ground analog |
| 8 | Ground analog |
| 9 | +5 VDC |
| 10 | Ground |
| 11 | Monitor detect |
| 12 | DDC 2B data |
| 13 | Horizontal sync |
| 14 | Vertical sync |
| 15 | DDC 2B clock |

# RJ-45 (network)

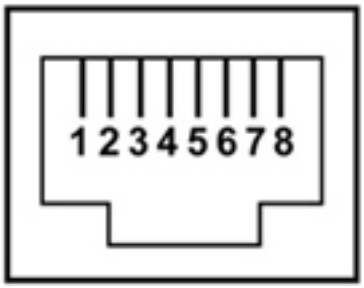


| Pin | Signal |
|---|---|
| 1 | Transmit + |
| 2 | Transmit - |
| 3 | Receive + |
| 4 | Unused |
| 5 | Unused |
| 6 | Receive - |
| 7 | Unused |
| 8 | Unused |

# Universal Serial Bus

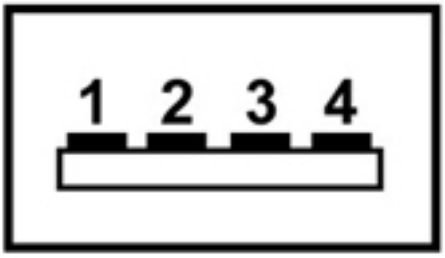


| Pin | Signal |
|---|---|
| 1 | +5 VDC |
| 2 | Data - |
| 3 | Data + |
| 4 | Ground |

# HDMI

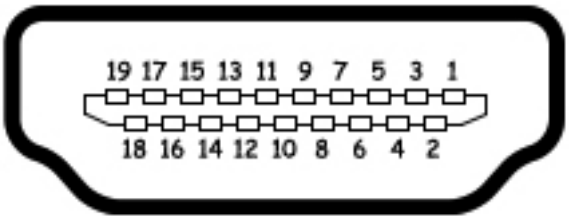


| Pin | Signal |
|---|---|
| 1 | TMDS data 2+ |
| 2 | TMDS data 2 shield |
| 3 | TMDS data 2– |
| 4 | TMDS data 1+ |
| 5 | TMDS data 1shield |
| 6 | TMDS data 1– |
| 7 | TMDS data 0+ |
| 8 | TMDS data 0 shield |
| 9 | TMDS data 0– |
| 10 | TMDS clock+ |
| 11 | TMDS clock shield |
| 12 | TMDS clock– |
| 13 | CEC |
| 14 | No connect |
| 15 | DDC clock |
| 16 | DDC data |
| 17 | Ground |
| 18 | +5V power |
| 19 | Hot plug detect |
| 20 | Shell |

# 9 Power cord set requirements

The wide range input feature of the computer permits it to operate from any line voltage from 100 to 120 volts AC or from 220 to 240 volts AC.

The 3-conductor power cord set included with the computer meets the requirements for use in the country or region where the equipment is purchased.

Power cord sets for use in other countries or regions must meet the requirements of the country or region where the computer is used.

## Requirements for all countries or regions

The requirements listed below are applicable to all countries or regions:

- The length of the power cord set must be at least 1.5 m (5.0 ft) and no more than 2.0 m (6.5 ft).
- All power cord sets must be approved by an acceptable accredited agency responsible for evaluation in the country or region where the power cord set will be used.
- The power cord sets must have a minimum current capacity of 10 amps and a nominal voltage rating of 125 or 250 V AC, as required by each country or region's power system.
- The appliance coupler must meet the mechanical configuration of an EN 60 320/IEC 320 Standard Sheet C13 connector for mating with the appliance inlet on the back of the computer.

# Requirements for specific countries or regions

| Country/region | Accredited agency | Applicable note number |
|---|---|---|
| Australia | EANSW | 1 |
| Austria | OVE | 1 |
| Belgium | CEBC | 1 |
| Canada | CSA | 2 |
| Denmark | DEMKO | 1 |
| Finland | FIMKO | 1 |
| France | UTE | 1 |
| Germany | VDE | 1 |
| Italy | IMQ | 1 |
| Japan | METI | 3 |
| The Netherlands | KEMA | 1 |
| Norway | NEMKO | 1 |
| The People's Republic of China | CCC | 5 |
| South Korea | EK | 4 |
| Sweden | SEMKO | 1 |
| Switzerland | SEV | 1 |
| Taiwan | BSMI | 4 |
| The United Kingdom | BSI | 1 |
| The United States | UL | 2 |

1. The flexible cord must be Type HO5VV-F, 3-conductor, 1.0-mm² conductor size. Power cord set fittings (appliance coupler and wall plug) must bear the certification mark of the agency responsible for evaluation in the country or region where it will be used.
2. The flexible cord must be Type SPT-3 or equivalent, No. 18 AWG, 3-conductor. The wall plug must be a two-pole grounding type with a NEMA 5-15P (15 A, 125 V) or NEMA 6-15P (15 A, 250 V) configuration.
3. The appliance coupler, flexible cord, and wall plug must bear a "T" mark and registration number in accordance with the Japanese Dentori Law. The flexible cord must be Type VCT or VCTF, 3-conductor, 1.00-mm² conductor size. The wall plug must be a two-pole grounding type with a Japanese Industrial Standard C8303 (7 A, 125 V) configuration.
4. The flexible cord must be Type RVV, 3-conductor, 0.75-mm² conductor size. Power cord set fittings (appliance coupler and wall plug) must bear the certification mark of the agency responsible for evaluation in the country or region where it will be used.
5. The flexible cord must be Type VCTF, 3-conductor, 0.75-mm² conductor size. Power cord set fittings (appliance coupler and wall plug) must bear the certification mark of the agency responsible for evaluation in the country or region where it will be used.

# 10 Recycling

## Battery

When a battery has reached the end of its useful life, do not dispose of the battery in general household waste. Follow the local laws and regulations in your area for computer battery disposal.

## Display

△ **CAUTION:** The procedures in this chapter can result in damage to display components. The only components intended for recycling purposes are the liquid crystal display (LCD) panel and the backlight. When you remove these components, handle them carefully.

**NOTE:** **Materials Disposal**. This HP product contains mercury in the backlight in the display assembly that might require special handling at end-of-life. Disposal of mercury may be regulated because of environmental considerations. For disposal or recycling information, contact your local authorities, or see the Electronic Industries Alliance (EIA) Web site at http://www.eiae.org.

This section provides general disassembly instructions for display assemblies. Specific instructions for your computer may vary. The display assembly must be disassembled to gain access to the backlight **(1)** and the liquid crystal display (LCD) panel **(2)**.

**Disassembly procedures may vary from those shown here.**

**NOTE:** The procedures provided in this chapter are general disassembly instructions. Specific details, such as screw sizes, quantities, and locations, and component shapes and sizes, can vary from one computer model to another.

Perform the following steps to disassemble the display assembly:

1. Remove all screw covers **(1)** and screws **(2)** that secure the display bezel to the display assembly.

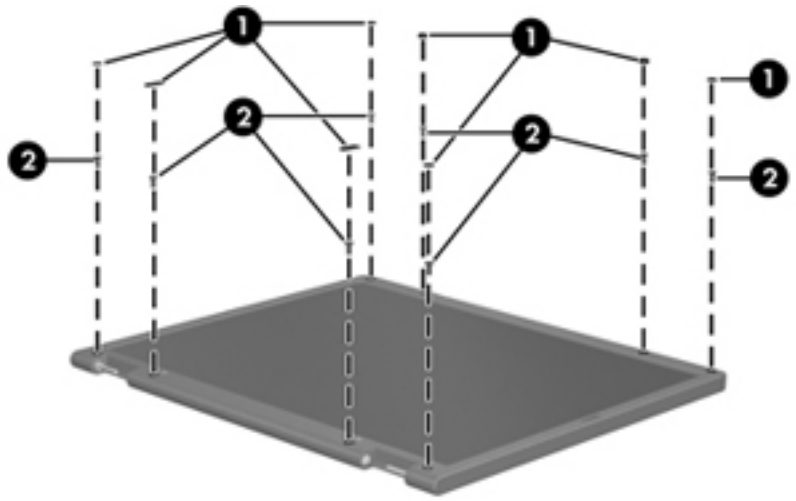

2. Lift up and out on the left and right inside edges **(1)** and the top and bottom inside edges **(2)** of the display bezel until the bezel disengages from the display assembly.

3. Remove the display bezel **(3)**.

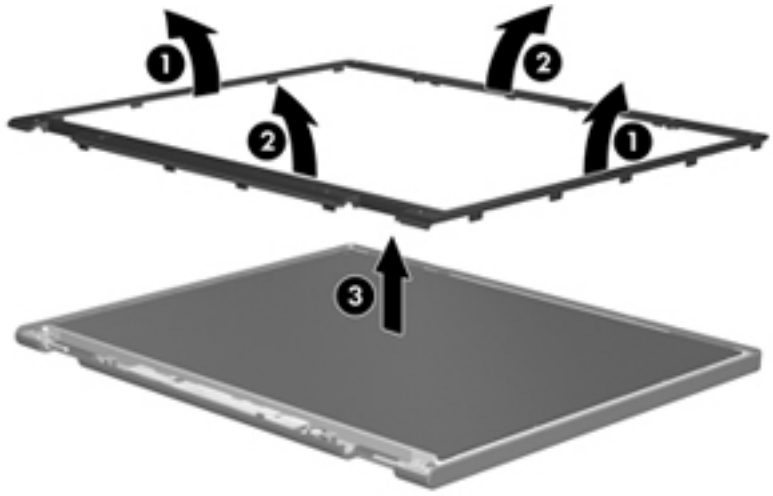

4. Disconnect all display panel cables **(1)** from the display inverter and remove the inverter **(2)**.

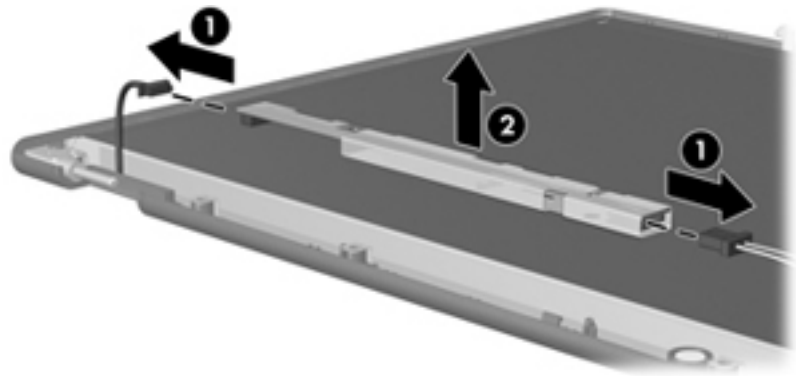

5. Remove all screws **(1)** that secure the display panel assembly to the display enclosure.
6. Remove the display panel assembly **(2)** from the display enclosure.

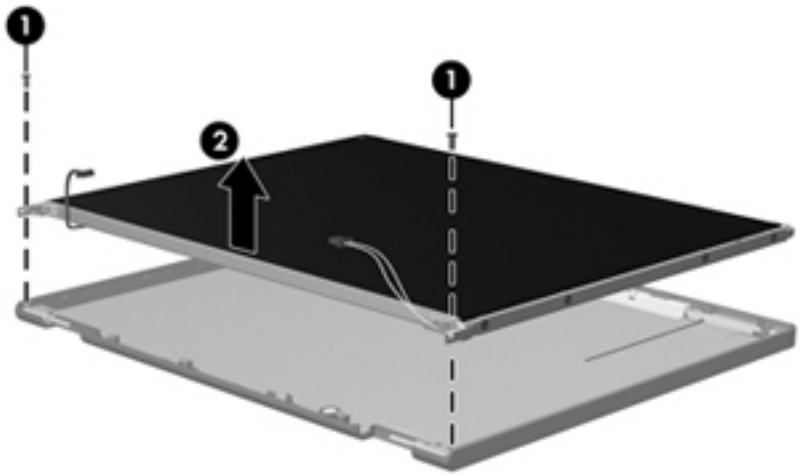

7. Turn the display panel assembly upside-down.
8. Remove all screws that secure the display panel frame to the display panel.

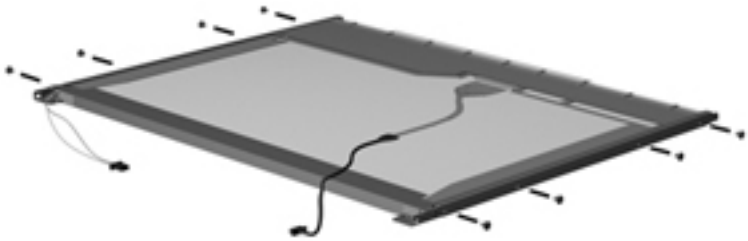

9. Use a sharp-edged tool to cut the tape **(1)** that secures the sides of the display panel to the display panel frame.

10. Remove the display panel frame **(2)** from the display panel.

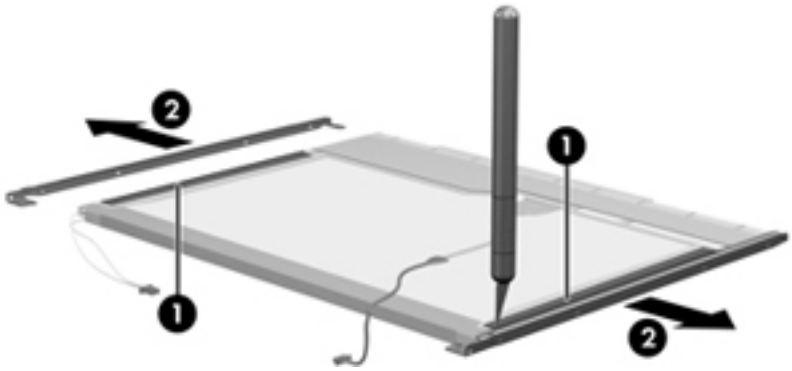

11. Remove the screws **(1)** that secure the backlight cover to the display panel.
12. Lift the top edge of the backlight cover **(2)** and swing it outward.

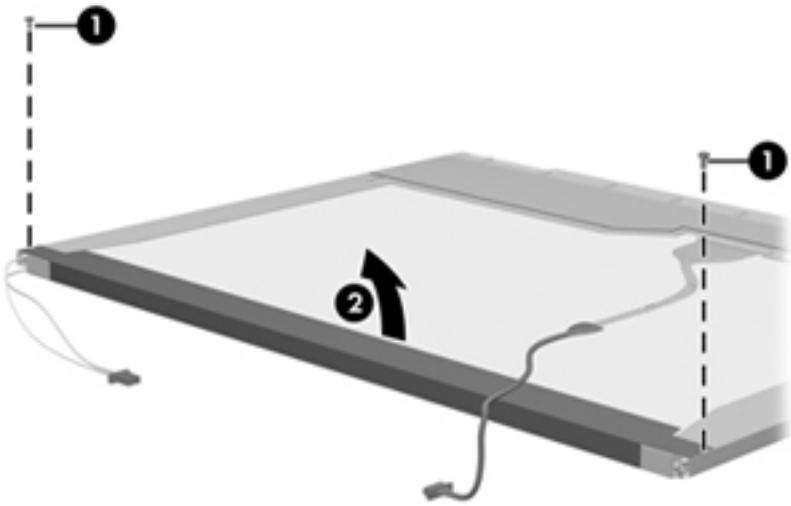

13. Remove the backlight cover.
14. Turn the display panel right-side up.

15. Remove the backlight cables **(1)** from the clip **(2)** in the display panel.

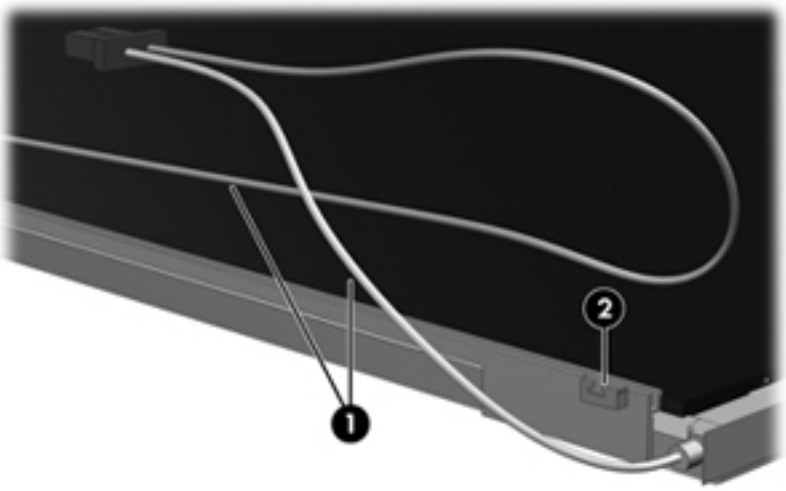


16. Turn the display panel upside-down.

⚠ **WARNING!** The backlight contains mercury. Exercise caution when removing and handling the backlight to avoid damaging this component and causing exposure to the mercury.

17. Remove the backlight frame from the display panel.

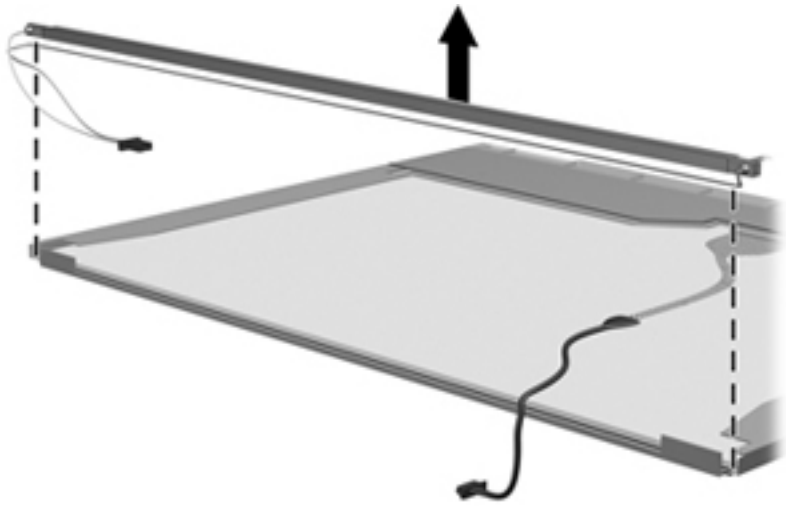

18. Remove the backlight from the backlight frame.

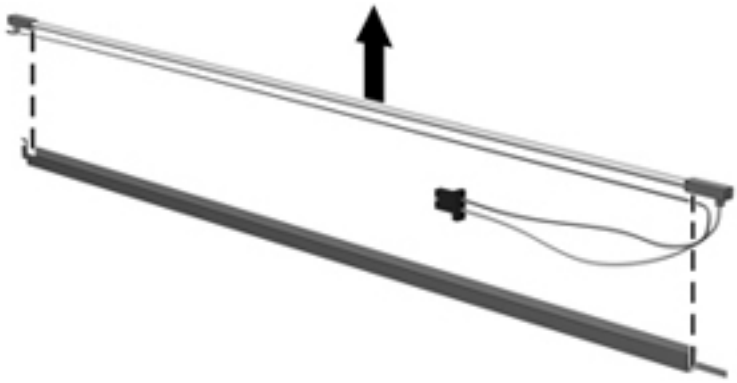

19. Disconnect the display panel cable **(1)** from the LCD panel.
20. Remove the screws **(2)** that secure the LCD panel to the display rear panel.
21. Release the LCD panel **(3)** from the display rear panel.
22. Release the tape **(4)** that secures the LCD panel to the display rear panel.

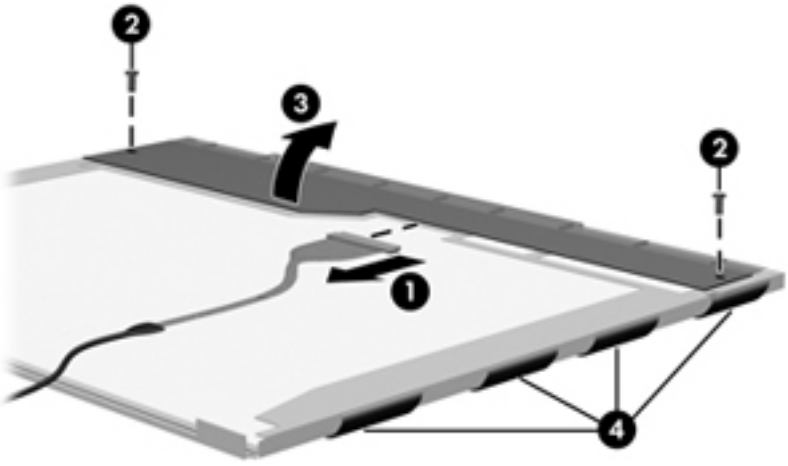


23. Remove the LCD panel.

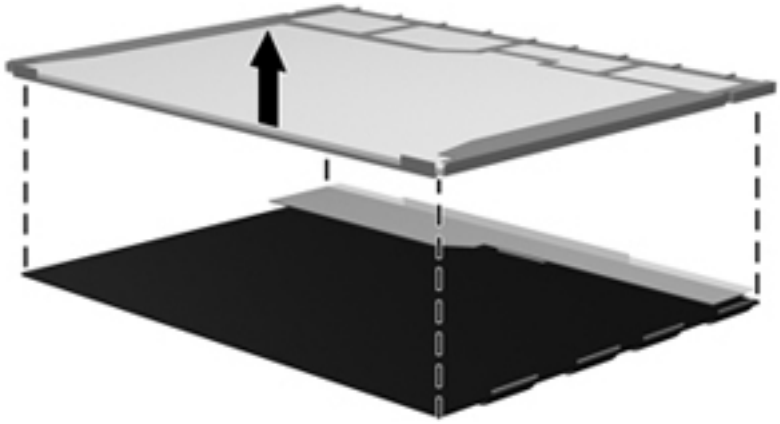

24. Recycle the LCD panel and backlight.

# Index


**Symbols/Numerics**

1394 Power Saving 90

**A**

AC adapter
  identifying 15
AC adapter light, identifying 11
AC adapter, spare part number 32
action keys, identifying 9
administrator password 89
antenna, removal 77
antennas, wireless 14
applications key, Windows 9
audio, product description 3
audio-in (microphone) jack
  identifying 12
  pin assignments 104
audio-out (headphone) jack
  identifying 12
  pin assignments 104

**B**

backing up
  customized window, toolbar, and menu bar settings 100
  personal files 100
  templates 100
base enclosure, spare part number 23, 32
battery
  identifying 15
  removal 41
  spare part number 30
  spare part numbers 23, 41
battery bay, identifying 13
battery charging light, identifying 11
battery release latch 14
bays
  battery 13
  hard drive 14
bezel
  illustrated 25
  spare part number 25, 75
Blu-ray ROM with LightScribe DVD ±R/RW SuperMulti DL Drive
  spare part number 32
  specifications 96
Bluetooth cable, spare part number 32
Bluetooth module
  removal 65
  spare part number 23, 29, 65
Bluetooth module cable, spare part number 23, 65
boot options 90
boot order 90
button sound 90
buttons
  power 8
  TouchPad right/left 6

**C**

cables, service considerations 35
camera module
  removal 75
  spare part number 75
camera, product description 3
caps lock light, identifying 7
Card Reader Power Saving 90
changing the language of Setup Utility 87
chipset, product description 1
compartment, memory module 14
components
  additional hardware 15
  bottom 13
  display 10
  front 5, 11
  left-side 12
  rear 13
  right-side 11
  top 6
computer feet
  locations 40
  spare part number 40
computer specifications 92
connector pin assignments
  audio-in 104
  audio-out 104
  external monitor 105
  HDMI 107
  headphone 104
  microphone 104
  monitor 105
  network 106
  RJ-45 106
  Universal Serial Bus (USB) 106
connector, power 11
connectors, service considerations 35
cord, power 15

**D**

Diagnostics menu 91
Digital Media Slot, identifying 11
diskette drive, precautions 35
display assembly
  removal 73
  spare part number 18, 32, 73
display bezel
  illustrated 25
  spare part number 25, 32, 75
display bracket, spare part number 32

display cable kit, spare part number 26, 32
display component recycling 110
display components
illustrated 25
spare part numbers 25
display enclosure
illustrated 25
spare part number 26
display enclosure, spare part number 32
display hinge cover, spare part number 32
display hinge kit
removal 77
spare part number 26
display panel
illustrated 25
product description 2
removal 76
spare part number 25, 76
display specifications 93
displaying system information 88
drive light 12
drives
boot order 90
optical 11
preventing damage 35
DVD±RW SuperMulti DL Drive with LightScribe
precautions 35
spare part number 32
spare part numbers 24, 27, 54

**E**

electrostatic discharge 36
esc key, identifying 9
Ethernet, product description 3
exiting Setup Utility 89
external media cards, product description 3
external monitor port
identifying 12
pin assignments 105

**F**

f11 103
fan always on 90
fan/heat sink assembly
removal 81
spare part number 19, 81
feet
locations 40
spare part number 40
fn key, identifying 9
front components 5
full system recovery 98
function keys, identifying 9

**G**

graphics, product description 2
grounding equipment and methods 38

**H**

hard drive
precautions 35
product description 2
removal 51
spare part number 32
spare part numbers 23, 27, 51
specifications 94
hard drive bay, identifying 14
hard drive cable, spare part number 23, 27, 32, 51
hard drive cover
illustrated 26
removal 52
hard drive hardware kit
spare part number 27
hard drive hardware kit, spare part number
spare part number 32
hard drive self test 91
HDMI port
identifying 12
pin assignments 107
headphone jack, pin assignments 104

**J**

jacks
audio-in (microphone) 12
audio-out (headphone) 12
RJ-45 (network) 12

**K**

keyboard
product description 4
removal 59
spare part number 32
spare part numbers 18, 59
keys
action 9
esc 9
fn 9
function 9
navigation 9
Windows applications 9
Windows logo 9

**L**

LAN Power Saving 90
language support 90
latch, battery release 14
lights
AC adapter 11
battery charging 11
caps lock 7
hard drive 12
optical drive 11, 12
power 7
TouchPad 7
webcam 10
wireless 7

**M**

Main menu 89
mass storage devices, spare part numbers 27
memory module
product description 2
removal 42
spare part number 31
spare part numbers 23, 42
memory module compartment, identifying 14
memory test 91
microphone (internal), identifying 10
microphone jack, pin assignments 104
microphone, product description 3
mini-card compartment cover, illustrated 26

model name 1
monitor port
external 12
pin assignments 105

**N**

navigating in Setup Utility 87
navigation keys, identifying 9
network jack, pin assignments 106

**O**

ODD connector
removal 69
spare part number 69
operating system, product description 4
optical drive
identifying 11
precautions 35
product description 2
removal 54
spare part numbers 24, 27, 54
specifications 96
optical drive light, identifying 11
Optical Drive Mounting Kit, spare part number 32

**P**

packing guidelines 37
passwords 89
performing a recovery 102
plastic parts 34
Plastics kit
contents 26
spare part number 26, 32
pointing device, product description 4
ports
external monitor 12
HDMI 12
product description 3
USB 11, 12
power button board
removal 71
spare part number 32, 71
power button, identifying 8
power connector cable
removal 67
spare part number 18, 33, 67
power connector, identifying 11
power cord
identifying 15
spare part number 28
power cord set requirements 108
power cord, spare part number 29
power light, identifying 7
power requirements, product description 4
power-on password 89
processor
product description 1
removal 84
spare part number 30, 32, 33
spare part numbers 18, 84
Processor C6 State 90
product description
audio 3
camera 3
chipset 1
display panel 2
Ethernet 3
external media cards 3
graphics 2
hard drives 2
keyboard 4
memory module 2
microphone 3
operating system 4
optical drives 2
pointing devices 4
ports 3
power requirements 4
processors 1
product name 1
security 4
serviceability 4
wireless 3
product name 1

**R**

recovering
a program or driver 98
from the dedicated recovery partition 103
from the recovery discs 102
recovery discs 98, 99
Recovery Manager 98, 102
recovery partition 98
recovery, system 102
removal/replacement
preliminaries 34
procedures 39
restore points 101
restoring default settings 88
RJ-45 (network) jack
identifying 12
pin assignments 106
RTC battery
removal 45
spare part number 19, 28, 29, 45
Rubber feet kit
spare part number 28
Rubber Feet Kit, spare part number 40
rubber kit
spare part number 32

**S**

Screw Kit, spare part number 32
secondary hard drive self test 91
security cable slot, identifying 12
Security menu 89
security, product description 4
selecting in Setup Utility 87
serial number 16, 39
service considerations 34
serviceability, product description 4
slots
Digital Media 11
memory module 14
security cable 12
solid-state drive (SSD) 98, 102, 103
speaker assembly
removal 63
spare part number 18, 32, 63
speakers, identifying 8
specifications
Blu-ray ROM with LightScribe DVD±R/RW SuperMulti DL Drive 96
computer 92
display 93
DVD±RW SuperMulti DL Drive with LightScribe 95

hard drive 94
optical drive 95, 96
system resources 97
starting Setup Utility 86
static-shielding materials 38
supported discs 99
system board
removal 79
spare part number 32, 33
spare part numbers 18, 79
System Configuration menu 90
system failure or instability 98
system information 89
system recovery 102
system resources 97
system restore points 98, 101

## T

thermal module, spare part number 19
thermal paste, replacement 83
tools required 34
top cover
removal 55
spare part number 18, 32, 55
TouchPad
buttons 6
identifying 6
light 7
on/off indicator 6
TouchPad zone, identifying 6
transporting guidelines 37

## U

USB board
removal 61
spare part number 18, 61
USB ports
identifying 11, 12
pin assignments 106
using Setup Utility 87
using system restore 101

## V

vents, identifying 12, 13
Virtualization Technology 90

## W

webcam light, identifying 10
webcam module
removal 75
spare part number 25, 32
webcam, identifying 10
Windows applications key, identifying 9
Windows logo key, identifying 9
wireless antennas 14
wireless antennas and cables
removal 78
spare part number 32, 78
wireless light 7
wireless, product description 3
wireless/memory module compartment cover
removal 43
spare part number 43
WLAN module
removal 46
spare part number 29, 30
spare part numbers 19, 46
workstation guidelines 37