Fold

Fold

HP WEBCAM HD 5210

Quick Start Guide

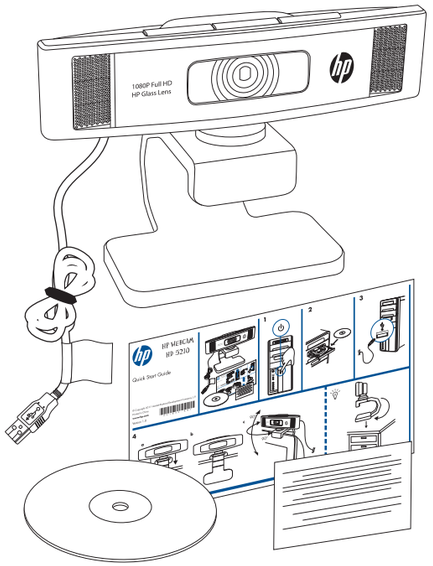

1

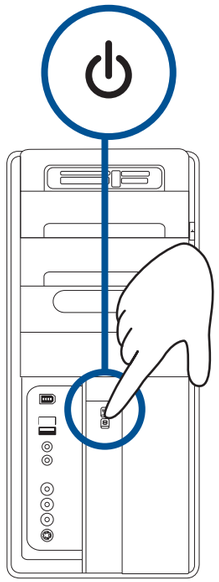

2

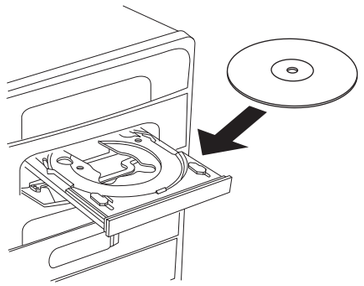

3

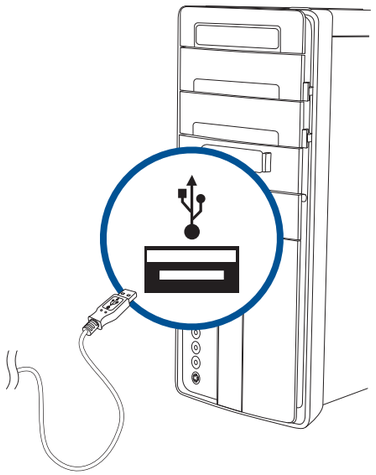

© Copyright 2011 Hewlett-Packard Development Company, L.P.

Printed in China

www.hp.com

Version 1.0

652059-001

Fold

Fold

4

a

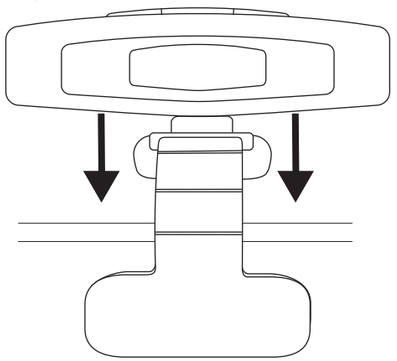

b

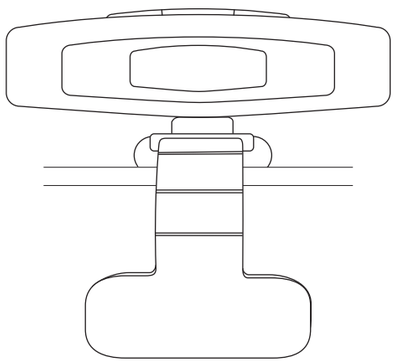

c

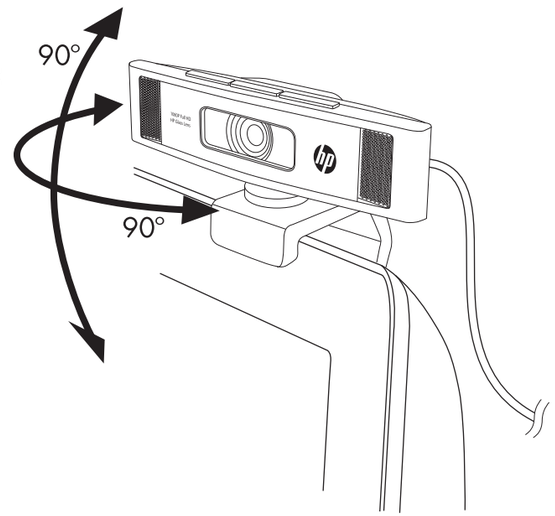

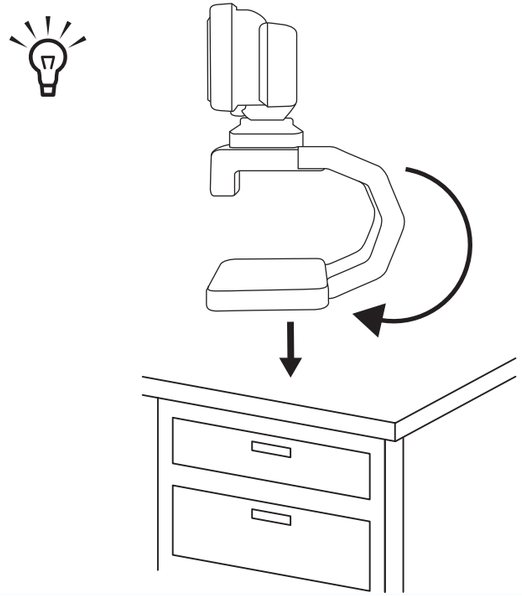

Fold

Fold