HP Officejet Pro 3610

www.hp.com/support www.register.hp.com

1

1a

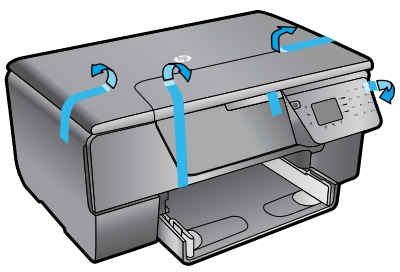

1b

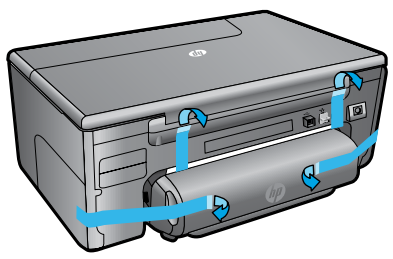

1c

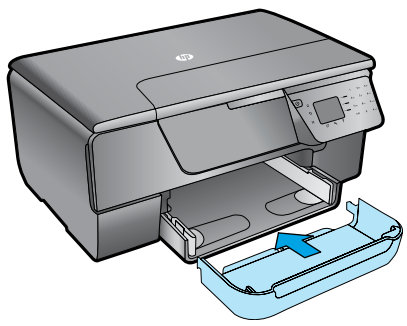

1d

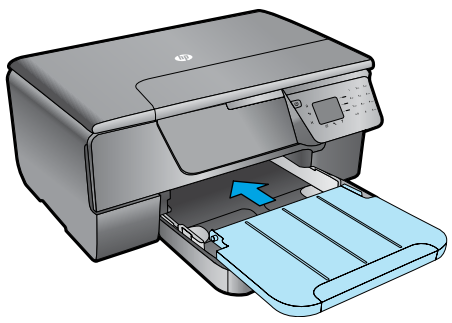

2

2a

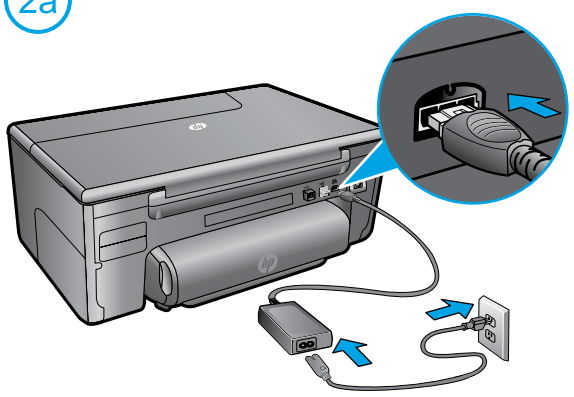

2b

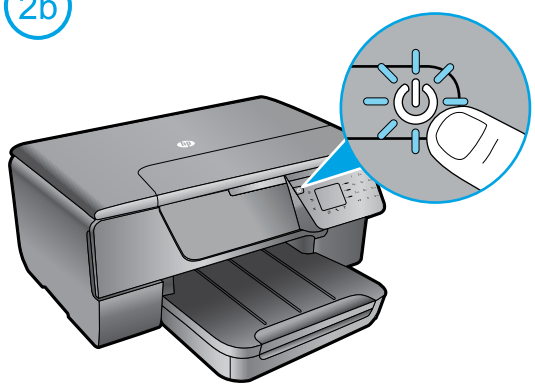

2c

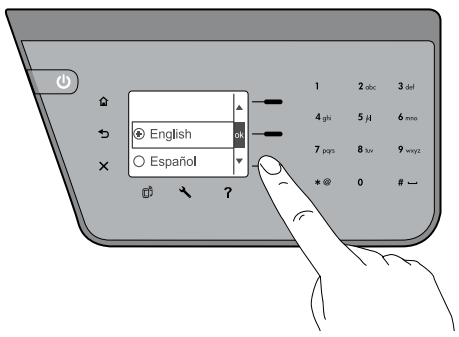

3

3a

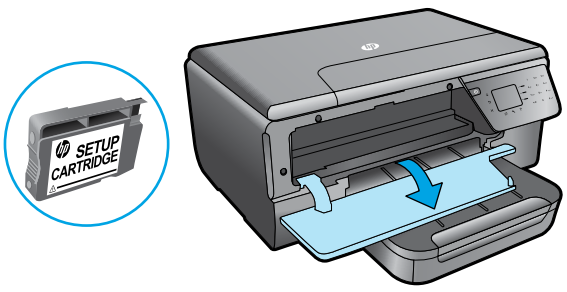

3b

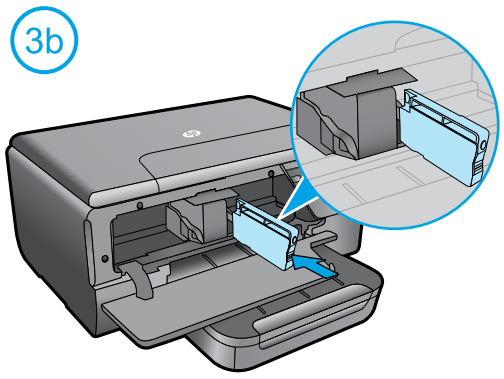

3c

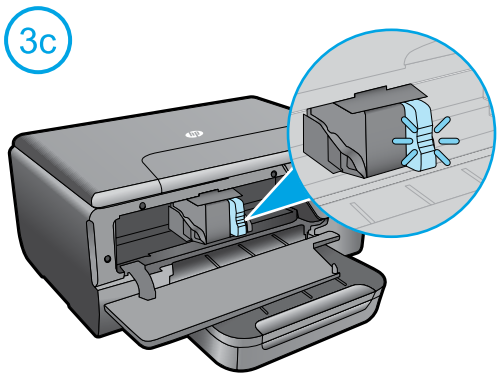

3d

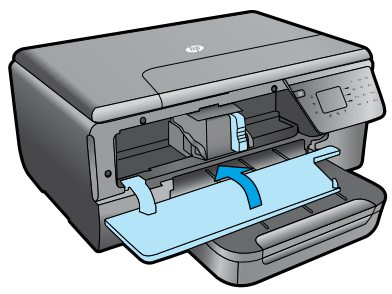

4

4a

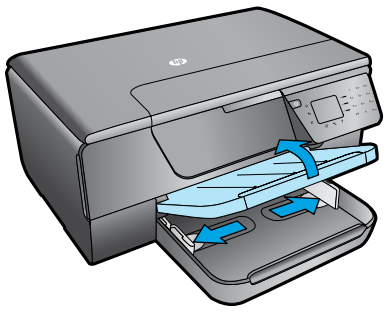

4b

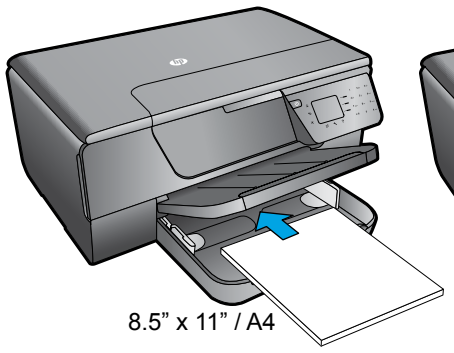

4c

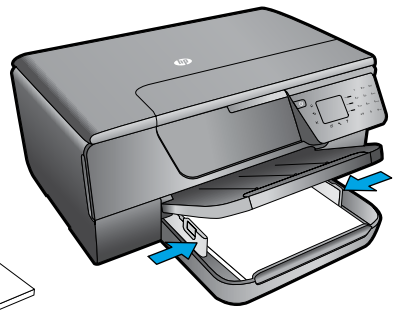

4d

4e

5

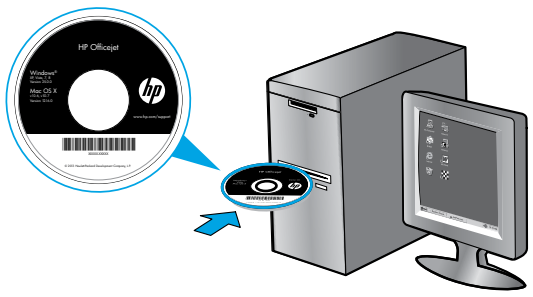

CZ292-90004

© 2013 Hewlett-Packard Development Company, L.P.

Printed in China
Imprimé en Chine
Impreso en China
Impresso na China
中国印刷
중국에서 인쇄