Maintenance and Service Guide

HP Pavilion x360 Convertible PC
IMPORTANT! This document is intended for HP authorized service providers only.

© Copyright 2019 HP Development Company, L.P.

Bluetooth is a trademark owned by its proprietor and used by HP Inc. under license. Intel and Pentium are trademarks of Intel Corporation in the U.S. and other countries. Windows is either a registered trademark or trademark of Microsoft Corporation in the United States and/or other countries.

The information contained herein is subject to change without notice. The only warranties for HP products and services are set forth in the express warranty statements accompanying such products and services. Nothing herein should be construed as constituting an additional warranty. HP shall not be liable for technical or editorial errors or omissions contained herein.

First Edition: March 2019

Document Part Number: L51897-001

Product notice

This guide describes features that are common to most models. Some features may not be available on your computer.

Not all features are available in all editions or versions of Windows. Systems may require upgraded and/or separately purchased hardware, drivers, software or BIOS update to take full advantage of Windows functionality. Windows 10 is automatically updated, which is always enabled. ISP fees may apply and additional requirements may apply over time for updates. Go to http://www.microsoft.com for details.

To access the latest user guides, go to http://www.hp.com/support, and follow the instructions to find your product. Then select **User Guides**.

Software terms

By installing, copying, downloading, or otherwise using any software product preinstalled on this computer, you agree to be bound by the terms of the HP End User License Agreement (EULA). If you do not accept these license terms, your sole remedy is to return the entire unused product (hardware and software) within 14 days for a full refund subject to the refund policy of your seller.

For any further information or to request a full refund of the price of the computer, please contact your seller.

Safety warning notice

⚠ WARNING! To reduce the possibility of heat-related injuries or of overheating the device, do not place the device directly on your lap or obstruct the device air vents. Use the device only on a hard, flat surface. Do not allow another hard surface, such as an adjoining optional printer, or a soft surface, such as pillows or rugs or clothing, to block airflow. Also, do not allow the AC adapter to contact the skin or a soft surface, such as pillows or rugs or clothing, during operation. The device and the AC adapter comply with the user-accessible surface temperature limits defined by the International Standard for Safety of Information Technology Equipment (IEC 60950-1).

Table of contents

1 Product description 1

2 External component identification 3

Locating hardware 3

Locating software 3

Right side 4

Left side 5

Display 7

Keyboard area 8

TouchPad 8

Lights 9

Special keys 10

Bottom 11

Labels 12

3 Illustrated parts catalog 13

Computer components 14

Display assembly components 16

Miscellaneous parts 17

4 Removal and replacement procedures preliminary requirements 18

Tools required 18

Service considerations 18

Plastic parts 18

Cables and connectors 19

Drive handling 19

Electrostatic discharge damage 20

Packaging and transporting guidelines 21

Workstation guidelines 21

Equipment guidelines 22

5 Removal and replacement procedures 23

Component replacement procedures 23

Bottom cover 23

Battery 25

Speakers 26

USB/audio board 27
Solid-state drive 29
WLAN module 30
Power connector cable 32
TouchPad cable 33
TouchPad 34
System board 35
Heat sink 37
Memory shield 39
USB/audio board cable 40
Power button actuator 41
Display assembly 42

6 Using Setup Utility (BIOS) 51
Starting Setup Utility (BIOS) 51
Updating Setup Utility (BIOS) 51
Determining the BIOS version 51
Downloading a BIOS update 52

7 Using HP PC Hardware Diagnostics 53
Using HP PC Hardware Diagnostics Windows (select products only) 53
Downloading HP PC Hardware Diagnostics Windows 54
Downloading the latest HP PC Hardware Diagnostics Windows version 54
Downloading HP Hardware Diagnostics Windows by product name or number (select products only) 54
Installing HP PC Hardware Diagnostics Windows 54
Using HP PC Hardware Diagnostics UEFI 55
Starting HP PC Hardware Diagnostics UEFI 55
Downloading HP PC Hardware Diagnostics UEFI to a USB flash drive 56
Downloading the latest HP PC Hardware Diagnostics UEFI version 56
Downloading HP PC Hardware Diagnostics UEFI by product name or number (select products only) 56
Using Remote HP PC Hardware Diagnostics UEFI settings (select products only) 57
Downloading Remote HP PC Hardware Diagnostics UEFI 57
Downloading the latest Remote HP PC Hardware Diagnostics UEFI version 57
Downloading Remote HP PC Hardware Diagnostics UEFI by product name or number 57
Customizing Remote HP PC Hardware Diagnostics UEFI settings 58

8 Backing up, restoring, and recovering 59
Backing up information and creating recovery media 59
Using Windows tools 59

Using the HP Cloud Recovery Download Tool to create recovery media (select products only) 59
Restoring and recovery 60
Restoring, resetting, and refreshing using Windows tools 60
Recovering using HP Recovery media 60
Changing the computer boot order 60

9 Specifications 61
Computer specifications 61

10 Power cord set requirements 62
Requirements for all countries 62
Requirements for specific countries and regions 63

11 Recycling 65

Index 66

1 Product description

Table 1-1 Product components and descriptions

Category	Description
Product Name	HP Pavilion x360 Convertible PC (model number 11-ap0xxx, CTO model number 11t-ap000)
Processors	Intel Pentium N5000 1.10-GHz (SC turbo up to 2.70-GHz) quad core processor (2400-MHz FSB, 4.0-MB L2 cache, 6 W)
Chipset	Intel integrated soldered-on-circuit (SoC)
Graphics	Internal graphics: Intel ultra high-definition (UHD) Graphics 605
Panel	11.6-inch, high-definition (HD) (1366×768), BrightView, white light-emitting diode (WLED), liquid crystal display (LCD), UWVA, 50, 220 nits, eDP, slim TouchScreen display assembly with flush glass
Memory	Support for DDR4-2400, 1.2 V system memory Support for up to 4-GB of system memory (512 MB×16)
Storage	Support for 256-GB, Peripheral Component Interconnect Express (PCIe), Non-Volatile Memory Express (NVMe) and 128-GB, M.2, SATA-3, solid-state drive with triple level cell solid-state drives
Audio and video	**Audio:** Integrated B&O Play Logo dual speakers with support for HP Audio Boost **Camera:** Integrated one-piece fixed HD 720p camera **Microphones:** Dual-array microphone
Wireless	Wireless local area network (WLAN) option: Realtek RTL8821CE ac 1×1 MU-MIMO+Bluetooth 4.2 M.2 PCIe WW WLAN module with 1 antenna
External media cards	HP MultiFormat microSD media card reader
Internal card expansion	One M.2 slot for solid-state drive One M.2 slot for WLAN module
Ports	• AC Smart Pin adapter plug • Audio-out (headphone)/audio-in (microphone) combo jack • High-definition multimedia interface (HDMI) v1.4 • USB Type-A port Gen. 1 (2) • USB Type-C port Gen. 1
Security	• Security hardware • Nano security lock • Trusted Platform Module (TPM) 2.0 (firmware) • Universal 2nd Factor Authentication
Sensors	• Accelerometer • Accelerometer+Gyroscope+eCompass • Sensor hub
Power requirements	• Support for a 2-cell, 37-Wh, 4.96-Ah, Li-ion, battery

Table 1-1 Product components and descriptions (continued)

Category	Description
	• Support for a 45-W HP Smart AC adapter (non-PFC, RC, 4.5-mm non-slim AC adapter) • Support for a 1.00-m, STK CONV with a C5 connector
Operating system	• Windows 10 Home 64-bit • Windows 10 Home S 64-bit • Windows 10 Home S 64-bit Value

2 External component identification

The computer features top-rated components. This chapter provides details about the computer components, where they are located, and how they work.

Locating hardware

To find out what hardware is installed on the computer:

- Type `device manager` in the taskbar search box, and then select the **Device Manager** app.

  A list displays all the devices installed on the computer.

For information about system hardware components and the system BIOS version number, press fn+esc (select products only).

Locating software

To find out what software is installed on the computer:

- Right-click the **Start** button, and then select **Apps and Features**.

Right side

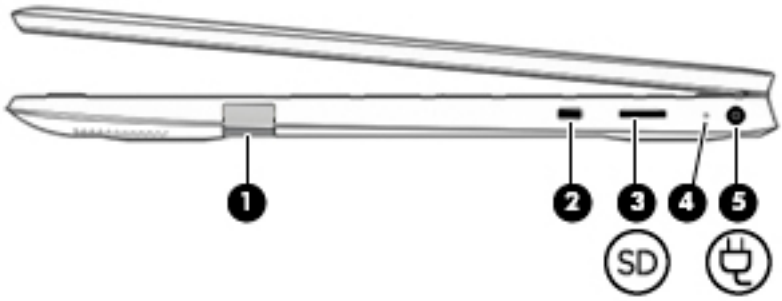

Table 2-1 Right-side components and descriptions

Component		Description
(1)	USB port (with door)	Connects a USB device, such as a cell phone, camera, activity tracker, or smartwatch, and provides data transfer.
(2)	Security cable slot	Attaches an optional security cable to the computer. NOTE: The security cable is designed to act as a deterrent, but it may not prevent the computer from being mishandled or stolen.
(3)	Memory card reader	Reads optional memory cards that enable you to store, manage, share, or access information. To insert a card: 1. Hold the card label-side up, with connectors facing the computer. 2. Insert the card into the memory card reader, and then press in on the card until it is firmly firmly seated. To remove a card: ▲ Press in on the card, and then remove it from the memory card reader.
(4)	AC adapter and battery light	• White: The AC adapter is connected and the battery is fully charged. • Blinking white: The AC adapter is disconnected and the battery has reached a low battery level. • Amber: The AC adapter is connected and the battery is charging. • Off: The battery is not charging.
(5)	Power connector	Connects to an AC adapter.

Left side

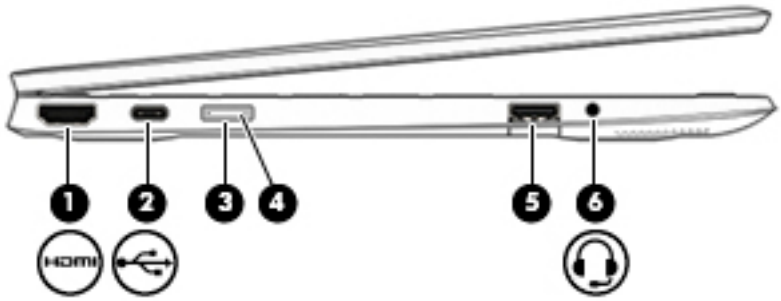

Table 2-2 Left-side components and descriptions

Component		Description
(1)	HDMI port	Connects an optional video or audio device, such as a high-definition television, any compatible digital or audio component, or a high-speed HDMI device.
(2)	USB Type-C port	Connects a USB device, such as a cell phone, camera, activity tracker, or smartwatch, and provides data transfer. NOTE: Cables and/or adapters (purchased separately) may be required.
(3)	Power light	• On: The computer is on. • Blinking: The computer is in the Sleep state, a power-saving state. The computer shuts off power to the display and other unneeded components. • Off: The computer is off or in Hibernation. Hibernation is a power-saving state that uses the least amount of power.
(4)	Power button	• When the computer is off, press the button to turn on the computer. • When the computer is on, press the button briefly to initiate Sleep. • When the computer is in the Sleep state, press the button briefly to exit Sleep (select products only). • When the computer is in Hibernation, press the button briefly to exit Hibernation. CAUTION: Pressing and holding down the power button results in the loss of unsaved information. If the computer has stopped responding and shutdown procedures are ineffective, press and hold the power button down for at least 5 seconds to turn off the computer.
(5)	USB port (with door)	Connects a USB device, such as a cell phone, camera, activity tracker, or smartwatch, and provides data transfer.
(6)	Audio-out (headphone)/Audio-in (microphone) combo jack	Connects optional powered stereo speakers, headphones, earbuds, a headset, or a television audio cable. Also connects an optional headset microphone. This jack does not support optional standalone microphones.

Table 2-2 Left-side components and descriptions (continued)

Component	Description
	WARNING! To reduce the risk of personal injury, adjust the volume before putting on headphones, earbuds, or a headset. For additional safety information, see the *Regulatory, Safety, and Environmental Notices*. To access this guide: ▲ Select the **Start** button, select **HP Help and Support**, and then select **HP Documentation**. **NOTE:** When a device is connected to the jack, the computer speakers are disabled.

Display

Table 2-3 Display components and descriptions

Component		Description
(1)	WLAN antenna*	Sends and receives wireless signals to communicate with WLANs.
(2)	Internal microphones (2)	Record sound.
(3)	Camera light	On: The camera is in use.
(4)	Camera	Allows you to video chat, record video, and record still images. Some cameras also allow a facial recognition logon to Windows, instead of a password logon. NOTE: Camera functions vary depending on the camera hardware and software installed on the product.

*The antenna is not visible from the outside of the computer. For optimal transmission, keep the area immediately around the antenna free from obstructions.

For wireless regulatory notices, see the section of the *Regulatory, Safety, and Environmental Notices* that applies to your country or region.

To access this guide:

▲ Select the **Start** button, select **HP Help and Support**, and then select **HP Documentation**.

Keyboard area

TouchPad

Table 2-4 TouchPad components and descriptions

Component		Description
(1)	TouchPad zone	Reads finger gestures to move the pointer or activate items on the screen.
(2)	Left TouchPad button	Functions like the left button on an external mouse.
(3)	Right TouchPad button	Functions like the right button on an external mouse.

Lights

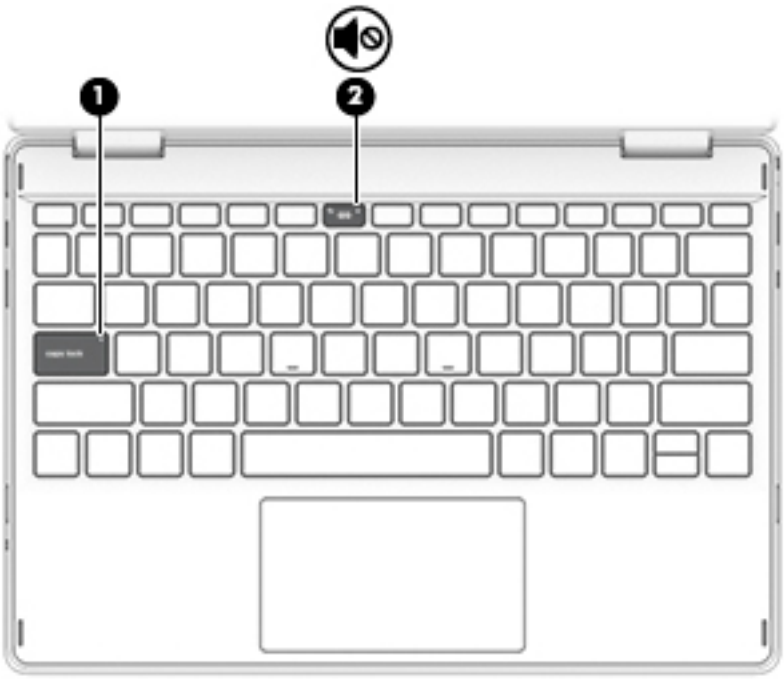

Table 2-5 Light components and descriptions

Component		Description
(1)	Caps lock light	On: Caps lock is on, which switches the key input to all capital letters.
(2)	Mute light	On: Computer sound is off. Off: Computer sound is on.

Special keys

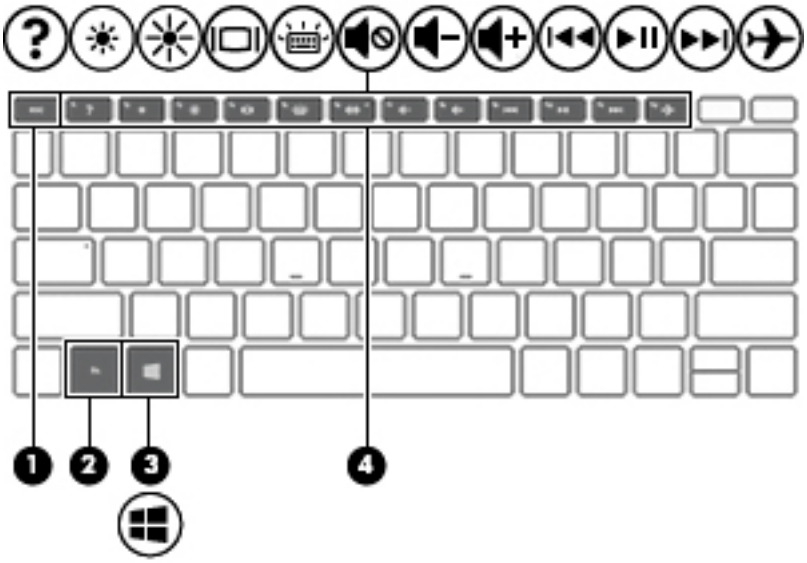

Table 2-6 Special key components and descriptions

Component		Description
(1)	esc key	Displays system information when pressed in combination with the fn key.
(2)	fn key	Executes frequently used system functions when pressed in combination with another key.
(3)	Windows key	Opens the Start menu. NOTE: Pressing the Windows key again will close the Start menu.
(4)	Action keys	Execute frequently used system functions. NOTE: On select products, the f5 action key turns the keyboard backlight feature off or on.

Bottom

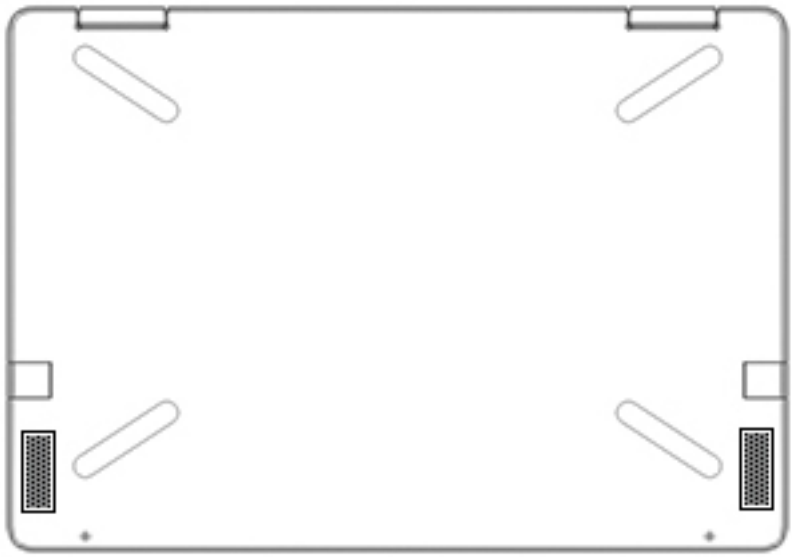

Table 2-7 Bottom component and description

Component	Description
Speakers (2)	Produce sound.

Labels

The labels affixed to the computer provide information that may be needed when troubleshooting system problems or traveling internationally with the computer. Labels may be in paper form or imprinted on the product.

- Service label—Provides important information to identify the computer. When contacting support, the serial number, the product number, or the model number may be requested. Locate this information before contacting support.

  The service label will resemble the example shown below:

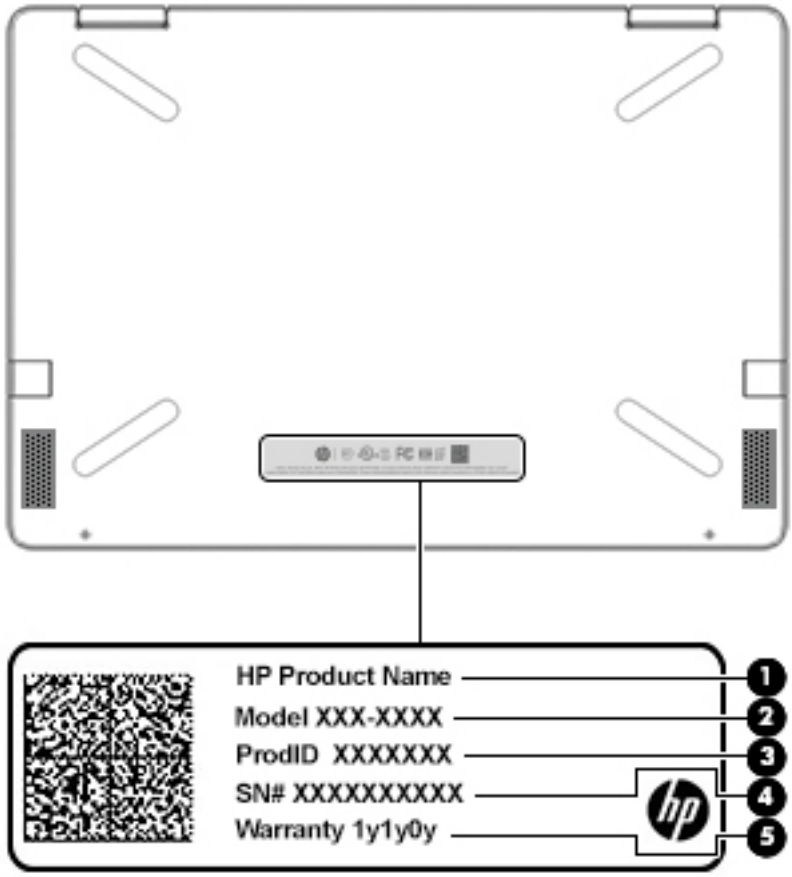

Table 2-8 Service label components and descriptions

Item	Component
(1)	Product name
(2)	Model number
(3)	Product identification
(4)	Serial number
(5)	Warranty period

3 Illustrated parts catalog

NOTE: HP continually improves and changes product parts. For complete and current information on supported parts for your computer, go to http://partsurfer.hp.com, select your country or region, and then follow the on-screen instructions.

Computer components

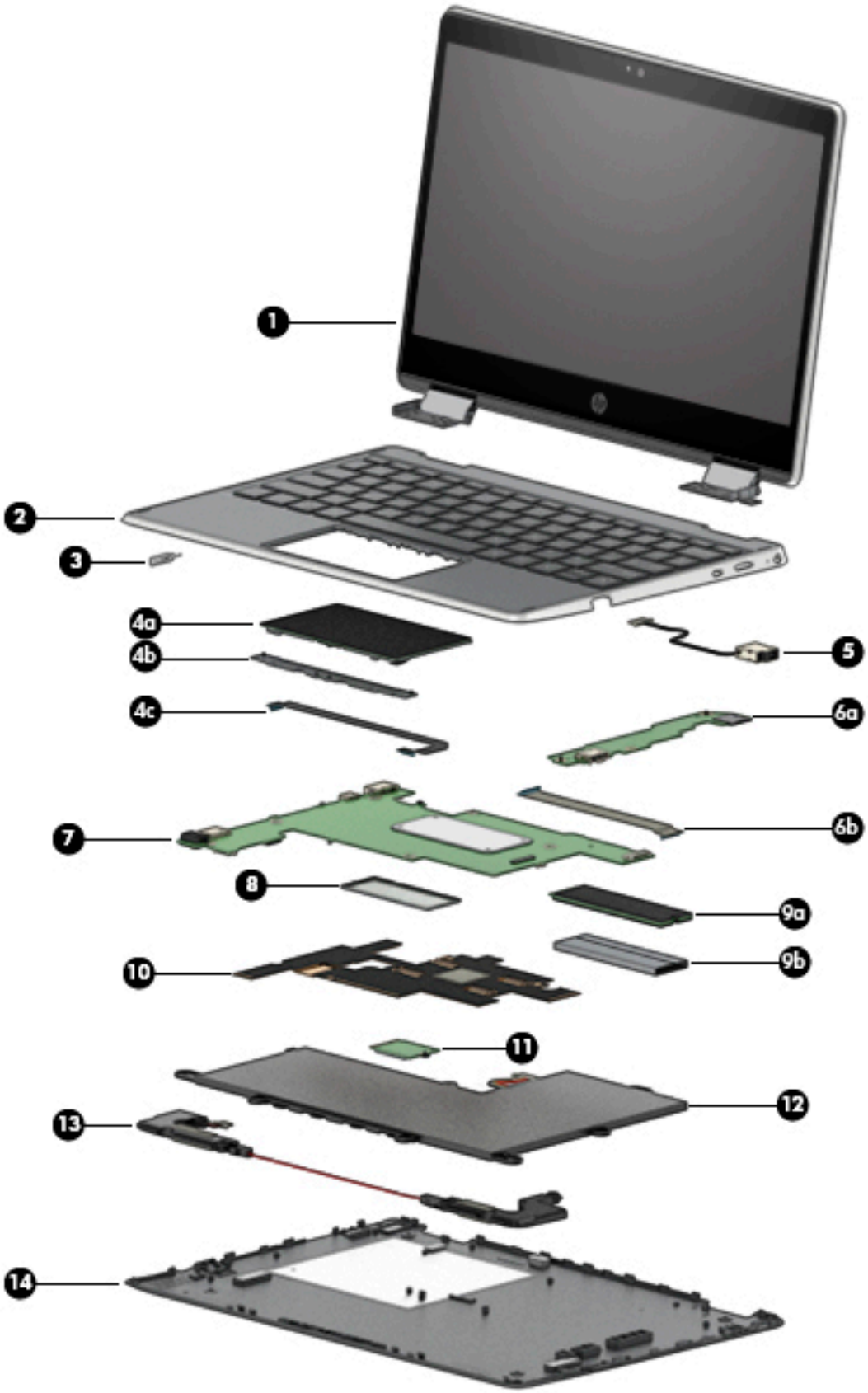

Table 3-1 Computer components and spare part information

Item	Component	Spare part number
(1)	**Display assembly:** The display assembly is spared at the subcomponent level only. For more display assembly spare part information, see Display assembly components on page 16.	
(2)	**Keyboard/top cover:**	
	For use in Canada	L52066-DB1
	For use in the United States	L52066-001
(3)	**Power button actuator**	L52443-001
(4a)	**TouchPad** (includes TouchPad bracket, does not include TouchPad cable)	L52058-001
(4b)	**TouchPad bracket** (included in TouchPad spare part kit)	
(4c)	**TouchPad cable**	L52062-001
(5)	**Power connector cable**	L52064-001
(6a)	**USB/audio board** (does not include USB/audio board cable)	L52056-001
(6b)	**USB/audio board cable**	L52063-001
(7)	**System board** equipped with an Intel Pentium N5000 1.10-GHz (SC turbo up to 2.70-GHz) quad core processor (2400-MHz FSB, 4.0-MB L2 cache, 6 W), an Intel UHD Graphics 605 graphics subsystem with UMA memory, and the Windows 10 operating system (includes processor and replacement thermal material)	L52048-601
(8)	**Memory shield**	L52442-001
(9a)	**Solid-state drive:**	
	256-GB, PCIe, NVMe solid-state drive	L52051-001
	128-GB, M.2, SATA-3, solid-state drive with TLC	L52050-001
(9b)	**Solid-state drive shield**	L52441-001
(10)	**Heat sink** (includes replacement thermal material)	L52065-001
(11)	**Realtek RTL8821CE ac 1×1 MU-MIMO+Bluetooth 4.2 M.2 PCIe WW WLAN module with 1 antenna**	L17365-005
(12)	**Battery** (2-cell, 37-WHr, 4.96-AHr, Li-ion)	824536-856
(13)	**Speakers** (include cables and 4 rubber isolators)	L52068-001
(14)	**Bottom cover**	L52060-001
	Rubber Foot Kit (not illustrated, includes bottom cover rubber feet)	L52067-001

Display assembly components

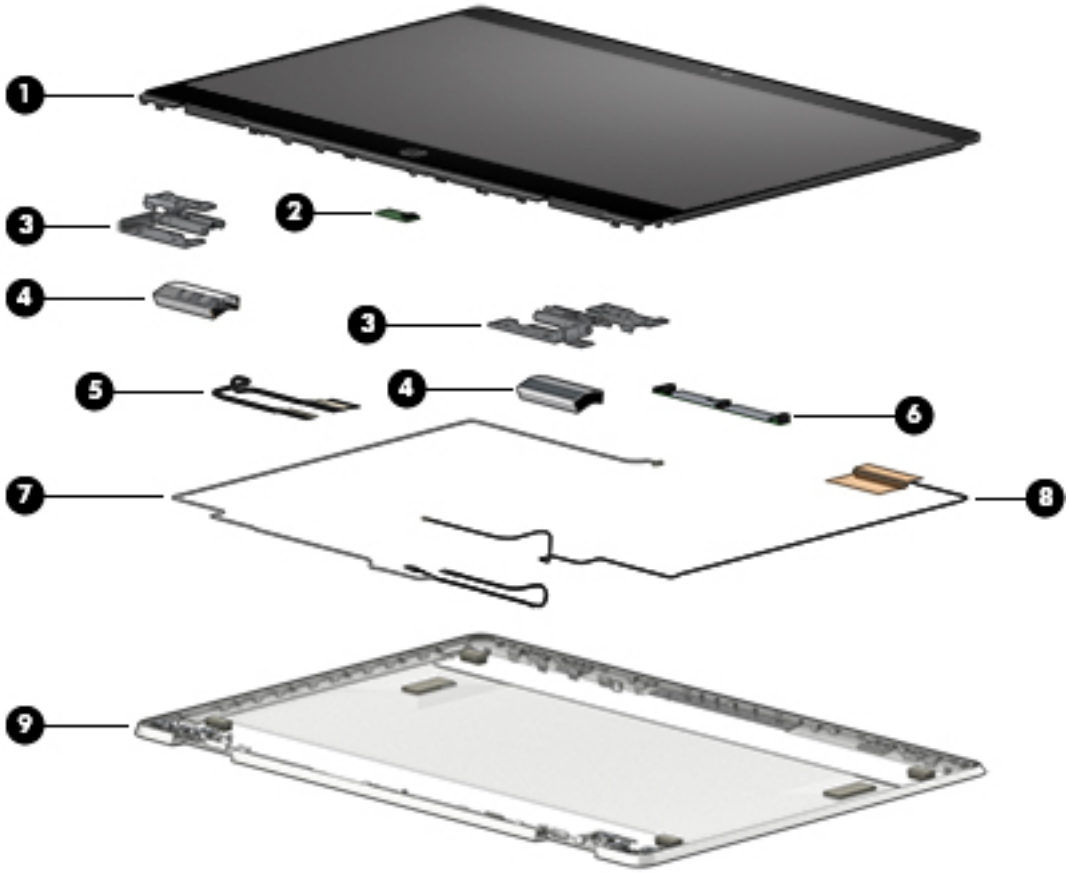

Table 3-2 Display components and spare part information

Item	Component	Spare part number
(1)	**Display panel assembly:** 11.6-in., HD (1366×768), BrightView, WLED, UWVA 50, 220 nits, eDP, slim, TouchScreen display panel with flush glass (includes display bezel)	L52049-001
(2)	**G-sensor module** (includes adhesive)	L52057-001
(3)	**Hinges** (2, include left and right display hinges)	L52055-001
(4)	**Hinge covers** (2, include left and right display hinge covers)	L52054-001
(5)	**Display panel cable**	L52061-001
(6)	**Webcam/microphone module**	L52059-001
(7)	**EDP cable** (includes webcam/microphone module cable and G-sensor module cable)	L52444-001
(8)	**Wireless antenna** (includes main antenna cable and transceiver)	L52052-001
(10)	**Display back cover** (includes rubber padding and shielding)	L52053-001

Miscellaneous parts

Table 3-3 Miscellaneous components and spare part information

Component	Spare part number
45-W HP Smart AC adapter (non-PFC, RC, 4.5-mm non-slim AC adapter)	741727-001
HP External USB optical drive	747080-001
Adapters:	
HDMI–to–VGA adapter	701943-001
USB–to–Gigabit RJ45 adapter	829941-001
USB-C–to–RJ45 adapter	855560-001
USB-C–to–USB-A adapter	833960-001
Stylus pen (Sunwoda, active)	910942-001
Stylus pen tip (Sunwoda)	L04536-001
Power cord (C5 connector, 1.0 m, STK CONV)	L19367-001
Rubber Foot Kit (includes bottom cover rear feet)	L52067-001
Screw Kit	L52069-001

4 Removal and replacement procedures preliminary requirements

Tools required

You will need the following tools to complete the removal and replacement procedures:

- Flat-bladed screwdriver
- Magnetic screwdriver
- Phillips P0 and P1 screwdrivers

Service considerations

The following sections include some of the considerations that you must keep in mind during disassembly and assembly procedures.

NOTE: As you remove each subassembly from the computer, place the subassembly (and all accompanying screws) away from the work area to prevent damage.

Plastic parts

CAUTION: Using excessive force during disassembly and reassembly can damage plastic parts. Use care when handling the plastic.

Cables and connectors

⚠ CAUTION: When servicing the computer, be sure that cables are placed in their proper locations during the reassembly process. Improper cable placement can damage the computer.

Cables must be handled with extreme care to avoid damage. Apply only the tension required to unseat or seat the cables during removal and insertion. Handle cables by the connector whenever possible. In all cases, avoid bending, twisting, or tearing cables. Be sure that cables are routed in such a way that they cannot be caught or snagged by parts being removed or replaced. Handle flex cables with extreme care; these cables tear easily.

Drive handling

⚠ CAUTION: Drives are fragile components that must be handled with care. To prevent damage to the computer, damage to a drive, or loss of information, observe these precautions:

- Before removing or inserting a hard drive, shut down the computer. If you are unsure whether the computer is off or in Hibernation, turn the computer on, and then shut it down through the operating system.
- Before handling a drive, be sure that you are discharged of static electricity. While handling a drive, avoid touching the connector.
- Before removing an optical drive, be sure that a disc is not in the drive and be sure that the optical drive tray is closed.
- Handle drives on surfaces covered with at least one inch of shock-proof foam.
- Avoid dropping drives from any height onto any surface.
- After removing a hard drive or an optical drive, place it in a static-proof bag.
- Avoid exposing an internal hard drive to products that have magnetic fields, such as monitors or speakers.
- Avoid exposing a drive to temperature extremes or liquids.
- If a drive must be mailed, place the drive in a bubble pack mailer or other suitable form of protective packaging and label the package “FRAGILE.”

Electrostatic discharge damage

Electronic components are sensitive to electrostatic discharge (ESD). Circuitry design and structure determine the degree of sensitivity. Networks built into many integrated circuits provide some protection, but in many cases, ESD contains enough power to alter device parameters or melt silicon junctions.

A discharge of static electricity from a finger or other conductor can destroy static-sensitive devices or microcircuitry. Even if the spark is neither felt nor heard, damage may have occurred.

An electronic device exposed to ESD may not be affected at all and can work perfectly throughout a normal cycle. Or the device may function normally for a while, then degrade in the internal layers, reducing its life expectancy.

⚠ CAUTION: To prevent damage to the tablet when you are removing or installing internal components, observe these precautions:

- Keep components in their electrostatic-safe containers until you are ready to install them.
- Before touching an electronic component, discharge static electricity by using the guidelines described in this section.
- Avoid touching pins, leads, and circuitry. Handle electronic components as little as possible.
- If you remove a component, place it in an electrostatic-safe container.

The following table shows how humidity affects the electrostatic voltage levels generated by different activities.

⚠ CAUTION: A product can be degraded by as little as 700 V.

Table 4-1 Typical electrostatic voltage levels

Typical electrostatic voltage levels			
	Relative humidity		
Event	10%	40%	55%
Walking across carpet	35,000 V	15,000 V	7,500 V
Walking across vinyl floor	12,000 V	5,000 V	3,000 V
Motions of bench worker	6,000 V	800 V	400 V
Removing DIPS from plastic tube	2,000 V	700 V	400 V
Removing DIPS from vinyl tray	11,500 V	4,000 V	2,000 V
Removing DIPS from Styrofoam	14,500 V	5,000 V	3,500 V
Removing bubble pack from PCB	26,500 V	20,000 V	7,000 V
Packing PCBs in foam-lined box	21,000 V	11,000 V	5,000 V

Packaging and transporting guidelines

Follow these grounding guidelines when packaging and transporting equipment:

- To avoid hand contact, transport products in static-safe tubes, bags, or boxes.
- Protect ESD-sensitive parts and assemblies with conductive or approved containers or packaging.
- Keep ESD-sensitive parts in their containers until the parts arrive at static-free workstations.
- Place items on a grounded surface before removing items from their containers.
- Always be properly grounded when touching a component or assembly.
- Store reusable ESD-sensitive parts from assemblies in protective packaging or nonconductive foam.
- Use transporters and conveyors made of antistatic belts and roller bushings. Be sure that mechanized equipment used for moving materials is wired to ground and that proper materials are selected to avoid static charging. When grounding is not possible, use an ionizer to dissipate electric charges.

Workstation guidelines

Follow these grounding workstation guidelines:

- Cover the workstation with approved static-shielding material.
- Use a wrist strap connected to a properly grounded work surface and use properly grounded tools and equipment.
- Use conductive field service tools, such as cutters, screw drivers, and vacuums.
- When fixtures must directly contact dissipative surfaces, use fixtures made only of static-safe materials.
- Keep the work area free of nonconductive materials, such as ordinary plastic assembly aids and Styrofoam.
- Handle ESD-sensitive components, parts, and assemblies by the case or PCM laminate. Handle these items only at static-free workstations.
- Avoid contact with pins, leads, or circuitry.
- Turn off power and input signals before inserting or removing connectors or test equipment.

Equipment guidelines

Grounding equipment must include either a wrist strap or a foot strap at a grounded workstation.

- When seated, wear a wrist strap connected to a grounded system. Wrist straps are flexible straps with a minimum of one megohm ±10% resistance in the ground cords. To provide proper ground, wear a strap snugly against the skin at all times. On grounded mats with banana-plug connectors, use alligator clips to connect a wrist strap.
- When standing, use foot straps and a grounded floor mat. Foot straps (heel, toe, or boot straps) can be used at standing workstations and are compatible with most types of shoes or boots. On conductive floors or dissipative floor mats, use foot straps on both feet with a minimum of one megohm resistance between the operator and ground. To be effective, the conductive must be worn in contact with the skin.

The following grounding equipment is recommended to prevent electrostatic damage:

- Antistatic tape
- Antistatic smocks, aprons, and sleeve protectors
- Conductive bins and other assembly or soldering aids
- Nonconductive foam
- Conductive tabletop workstations with ground cords of one megohm resistance
- Static-dissipative tables or floor mats with hard ties to the ground
- Field service kits
- Static awareness labels
- Material-handling packages
- Nonconductive plastic bags, tubes, or boxes
- Metal tote boxes
- Electrostatic voltage levels and protective materials

The following table lists the shielding protection provided by antistatic bags and floor mats.

Table 4-2 Shielding protection provided by antistatic bags and floor mats

Material	Use	Voltage protection level
Antistatic plastics	Bags	1,500 V
Carbon-loaded plastic	Floor mats	7,500 V
Metallized laminate	Floor mats	5,000 V

5 Removal and replacement procedures

This chapter provides removal and replacement procedures for Authorized Service Provider only parts.

⚠ CAUTION: Components described in this chapter should only be accessed by an authorized service provider. Accessing these parts can damage the computer or void the warranty.

CAUTION: Only HP authorized service providers should perform the removal and replacement procedures described here. Accessing the internal part could damage the computer or void the warranty.

Component replacement procedures

NOTE: Details about the computer, including model, serial number, product key, and length of warranty, are on the service tag at the bottom of the computer. See Labels on page 12 for details.

NOTE: HP continually improves and changes product parts. For complete and current information on supported parts for the computer, go to http://partsurfer.hp.com, select the country or region, and then follow the on-screen instructions.

There are as many as 42 screws that must be removed, replaced, and/or loosened when servicing the computer. Make special note of each screw size and location during removal and replacement.

Bottom cover

Table 5-1 Bottom cover description and spare part number information

Description	Spare part number
Bottom cover	L52060-001

Before removing the bottom cover, follow these steps:

1. Shut down the computer. If you are unsure whether the computer is off or in Hibernation, turn the computer on, and then shut it down through the operating system.
2. Disconnect all external devices connected to the computer.
3. Disconnect the power from the computer by first unplugging the power cord from the AC outlet, and then unplugging the AC adapter from the computer.

Remove the bottom cover:

1. Remove the four rubber feet **(1)**.

   The rubber feet are available in the Rubber Foot Kit, spare part number L52067-001.
2. Remove the four Phillips M2.5×5.4 screws **(2)** under the rubber feet.

3. Remove the two Phillips M2.0×4.2 screws **(3)** on the front edge of the bottom cover

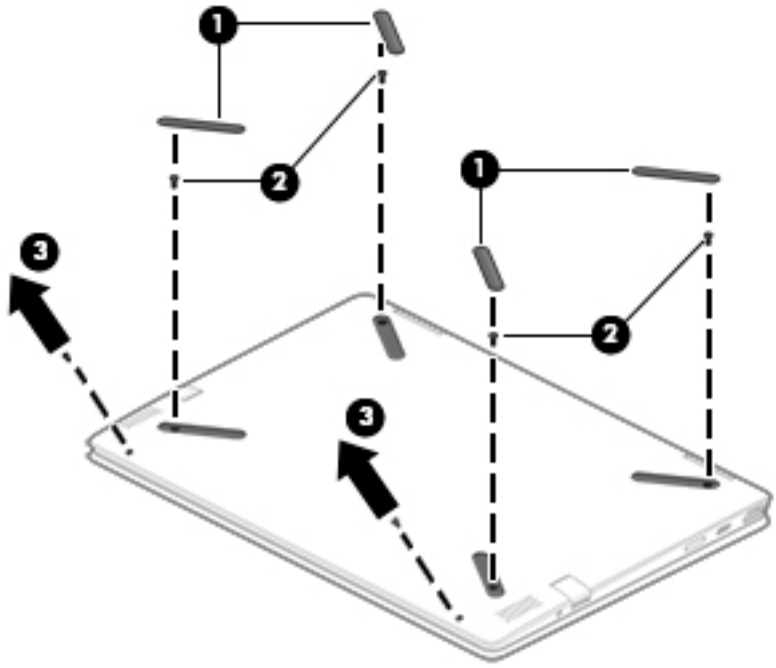

4. Insert a case utility tool **(1)** or similar thin, plastic tool into the front edge **(2)** of the bottom cover and detach it from the keyboard/top cover.
5. Detach the left **(3)** and right sides of the bottom cover from the keyboard/top cover.
6. Remove the bottom cover **(4)**.

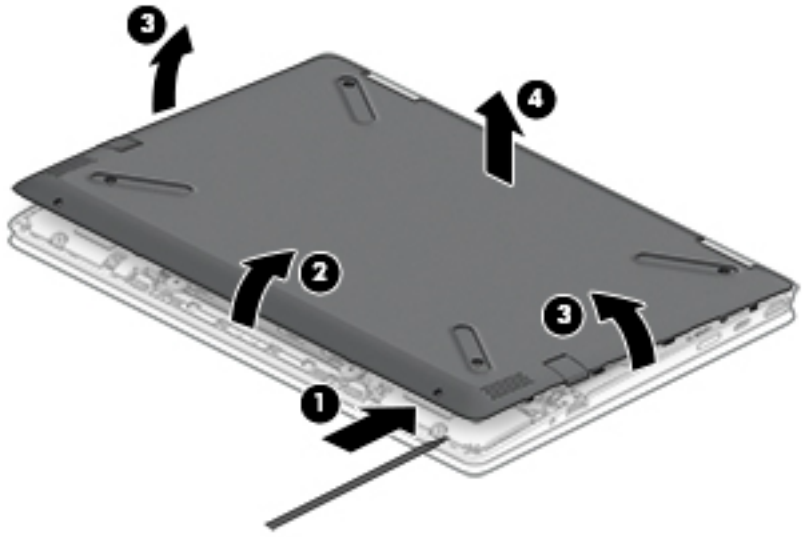

Reverse this procedure to install the bottom cover.

Battery

Table 5-2 Battery description and spare part number information

Description	Spare part number
2-cell, 37-WHr, 4.96-AHr, Li-ion battery	824536-856

Before removing the battery, follow these steps:

1. Shut down the computer. If you are unsure whether the computer is off or in Hibernation, turn the computer on, and then shut it down through the operating system.
2. Disconnect all external devices connected to the computer.
3. Disconnect the power from the computer by first unplugging the power cord from the AC outlet, and then unplugging the AC adapter from the computer.
4. Remove the bottom cover (see Bottom cover on page 23).

Remove the battery:

1. Disconnect the battery cable **(1)** from the system board.
2. Release the speaker cables from the retention clips/routing channels **(2)** built into the front edge of the battery.
3. Remove the four Phillips M2.0×3.0 screws **(3)** that secure the battery to the keyboard/top cover.
4. Remove the battery **(4)**.

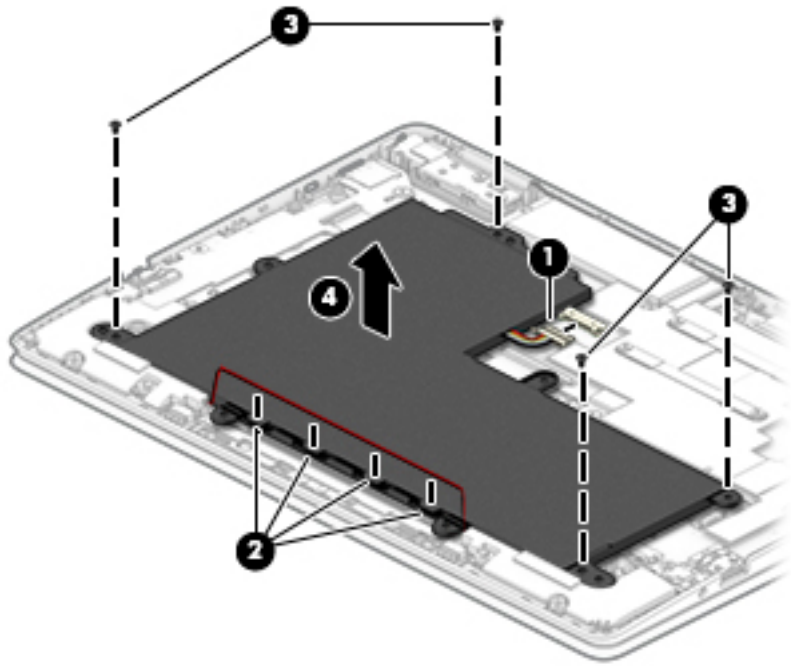

Reverse this procedure to install the battery.

Speakers

Table 5-3 Speakers description and spare part number information

Description	Spare part number
Speakers (include cables and 4 rubber isolators)	L52068-001

Before removing the speakers, follow these steps:

1. Turn off the computer. If you are unsure whether the computer is off or in Hibernation, turn the computer on, and then shut it down through the operating system.
2. Disconnect the power from the computer by first unplugging the power cord from the AC outlet, and then unplugging the AC adapter from the computer.
3. Disconnect all external devices from the computer.
4. Remove the bottom cover (see Bottom cover on page 23).

Remove the speakers:

1. Disconnect the battery cable **(1)** from the system board (see Battery on page 25).
2. Release the speaker cables from the retention clips/routing channels **(2)** built into the front edge of the battery.

3. Remove the speakers **(3)**.

NOTE: When removing the speakers, make note of the location and condition of the four rubber isolators **(4)**. These isolators are critical to the performance of the speakers. The absence of these isolators or damage to them can degrade the speaker performance.

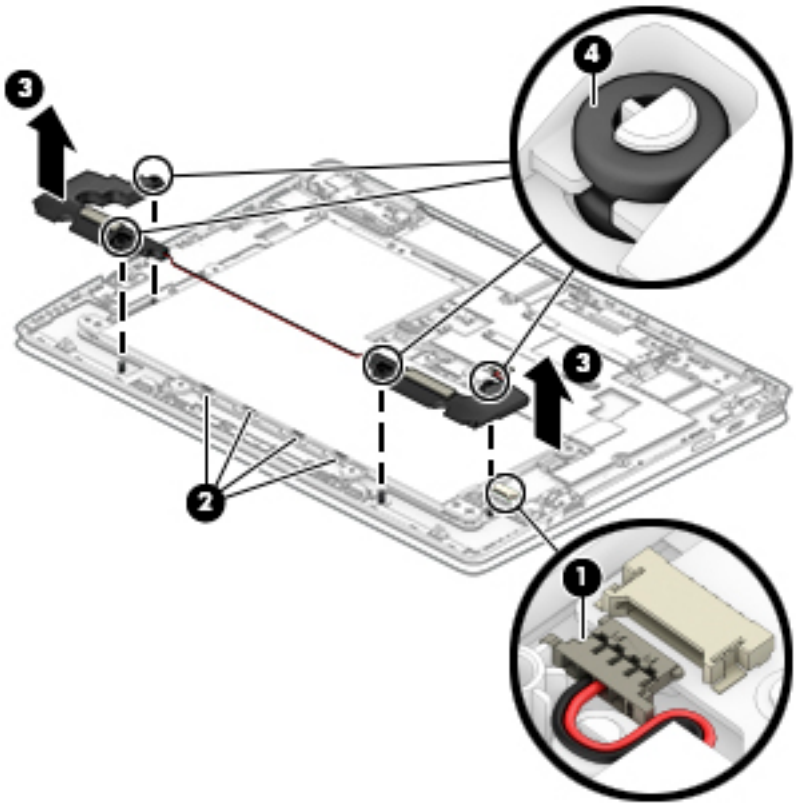

Reverse this procedure to install the speakers.

USB/audio board

Table 5-4 USB/audio board description and spare part number information

Description	Spare part number
USB/audio board (The USB/audio board spare part kit does not include the USB/audio board cable. The USB/audio board cable is available using spare part number L52063-001.)	L52056-001

Before removing the USB/audio board, follow these steps:

1. Turn off the computer. If you are unsure whether the computer is off or in Hibernation, turn the computer on, and then shut it down through the operating system.
2. Disconnect the power from the computer by first unplugging the power cord from the AC outlet, and then unplugging the AC adapter from the computer.
3. Disconnect all external devices from the computer.
4. Remove the bottom cover (see Bottom cover on page 23).
5. Disconnect the battery cable from the system board (see Battery on page 25).

Remove the USB/audio board:

1. Release the zero insertion force (ZIF) connector **(1)** to which USB/audio board cable is connected, and then disconnect the USB/audio board cable from the USB/audio board.
2. Remove the two Phillips M2.0×2.2 broad head screws **(2)** that secure the USB/audio board to the keyboard/top cover.
3. Remove the USB/audio board **(3)**.

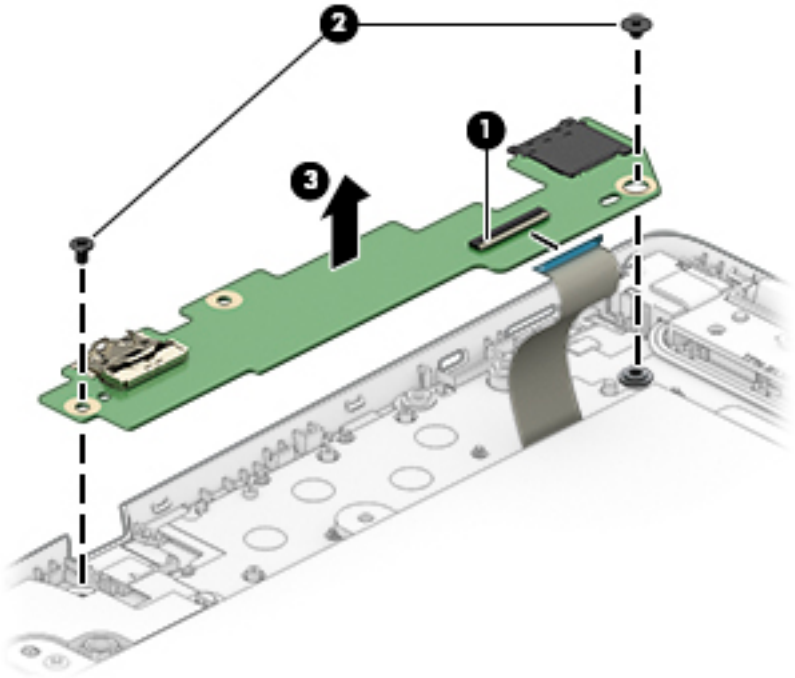

Reverse this procedure to install the USB/audio board.

Solid-state drive

Table 5-5 Solid-state drive description and spare part number information

Description	Spare part number
256-GB, PCIe, NVMe solid-state drive	L52050-001
128-GB, M.2, SATA-3, solid-state drive with TLC	L52441-001
Solid-state drive shield	L52441-001

Before removing the solid-state drive, follow these steps:

1. Shut down the computer. If you are unsure whether the computer is off or in Hibernation, turn the computer on, and then shut it down through the operating system.
2. Disconnect all external devices connected to the computer.
3. Disconnect the power from the computer by first unplugging the power cord from the AC outlet, and then unplugging the AC adapter from the computer.
4. Remove the bottom cover (see Bottom cover on page 23).
5. Disconnect the battery cable from the system board (see Battery on page 25).

Remove the solid-state drive:

1. Remove the Phillips M2.0×2.2 broad head screw **(1)** that secures the solid-state drive to the system board.
2. Remove the solid-state drive **(2)** by pulling it away from the slot.

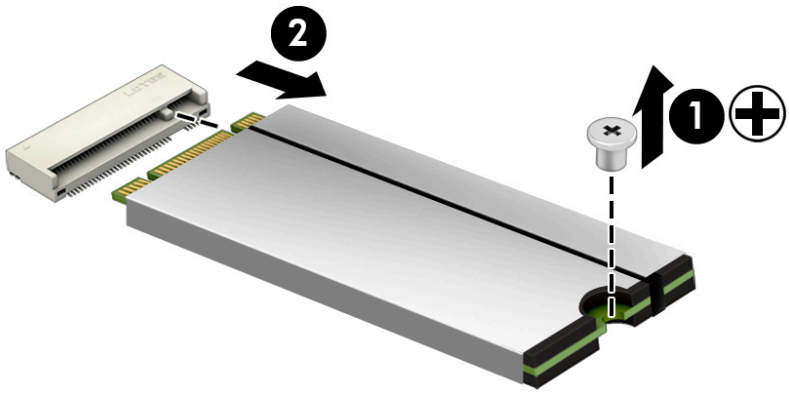

Reverse this procedure to reassemble and install the solid-state drive.

WLAN module

Table 5-6 WLAN drive description and spare part number information

Description	Spare part number
Realtek RTL8821CE ac 1×1 MU-MIMO+Bluetooth 4.2 M.2 PCIe WW WLAN module with 1 antenna	L17365-005

⚠ CAUTION: To prevent an unresponsive system, replace the wireless module only with a wireless module authorized for use in the computer by the governmental agency that regulates wireless devices in your country or region. If you replace the module and then receive a warning message, remove the module to restore device functionality, and then contact technical support.

Before removing the WLAN module, follow these steps:

1. Turn off the computer. If you are unsure whether the computer is off or in Hibernation, turn the computer on, and then shut it down through the operating system.
2. Disconnect the power from the computer by first unplugging the power cord from the AC outlet, and then unplugging the AC adapter from the computer.
3. Disconnect all external devices from the computer.
4. Remove the bottom cover (see Bottom cover on page 23).
5. Remove the battery (see Battery on page 25).

Remove the WLAN module:

1. Disconnect the WLAN antenna cable **(1)** from the terminal on the WLAN module.
2. Remove the Phillips M2.0×2.2 broad head screw **(2)** that secures the WLAN module to the system board. (The WLAN module tilts up.)

3. Remove the WLAN module **(3)** by pulling the module away from the slot at an angle.

NOTE: The WLAN module is designed with a notch to prevent incorrect insertion.

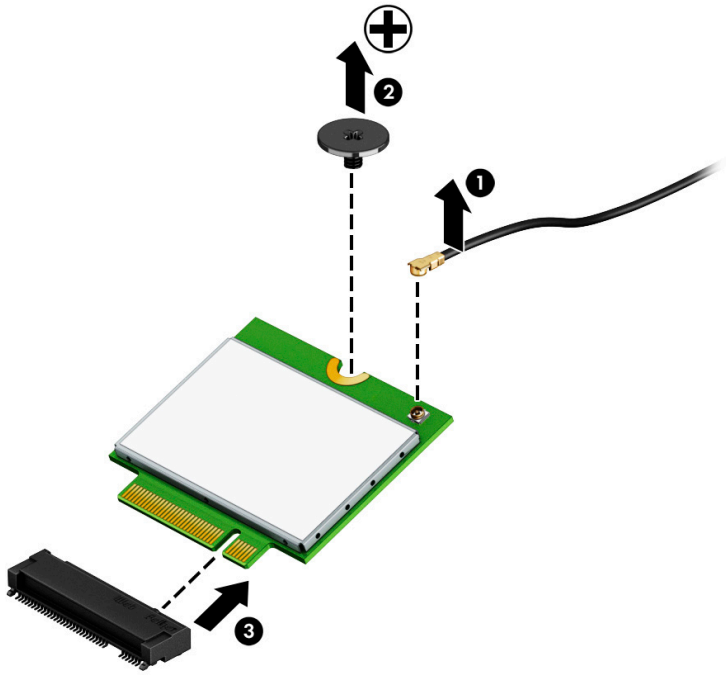

Reverse this procedure to install the WLAN module.

Power connector cable

Table 5-7 Power connector cable description and spare part number information

Description	Spare part number
Power connector cable	L52064-001

Before removing the power connector cable, follow these steps:

1. Shut down the computer. If you are unsure whether the computer is off or in Hibernation, turn the computer on, and then shut it down through the operating system.
2. Disconnect all external devices connected to the computer.
3. Disconnect the power from the computer by first unplugging the power cord from the AC outlet, and then unplugging the AC adapter from the computer.
4. Remove the bottom cover (see Bottom cover on page 23).
5. Disconnect the battery cable from the system board (see Battery on page 25).
6. Remove the solid-state drive (see Solid-state drive on page 29).

Remove the power connector cable:

1. Disconnect the power connector cable from the system board **(1)**.
2. Release the power connector cable from the retention clips **(2)** built into the keyboard/top cover.
3. Remove the two Phillips M2.5×5.7 screws **(3)** that secure the display right hinge to the keyboard/top cover.
4. Swing the display right hinge **(4)** up and back.
5. Remove the power connector cable **(5)**.

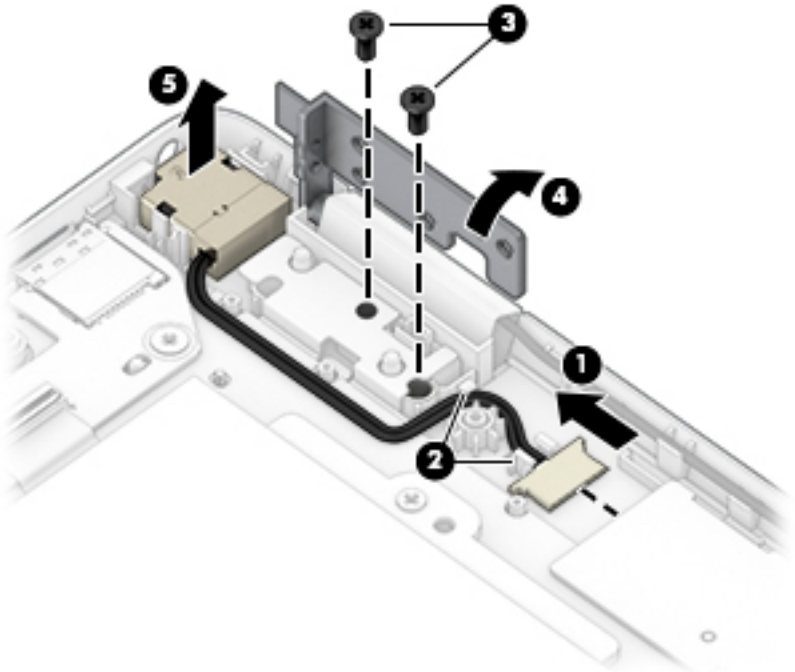

Reverse this procedure to install the power connector cable.

TouchPad cable

NOTE: The TouchPad spare part kit does not include the TouchPad cable. The TouchPad cable is available using spare part number L52062-001.

Before removing the TouchPad cable, follow these steps:

1. Shut down the computer. If you are unsure whether the computer is off or in Hibernation, turn the computer on, and then shut it down through the operating system.
2. Disconnect all external devices connected to the computer.
3. Disconnect the power from the computer by first unplugging the power cord from the AC outlet, and then unplugging the AC adapter from the computer.
4. Remove the bottom cover (see Bottom cover on page 23).
5. Remove the battery (see Battery on page 25).

Remove the TouchPad cable:

1. Release the ZIF connector **(1)** to which TouchPad cable is connected, and then disconnect the TouchPad cable from the system board.
2. Release the ZIF connector **(2)** to which TouchPad cable is connected, and then disconnect the TouchPad cable from the TouchPad.
3. Remove the TouchPad cable **(3)**.

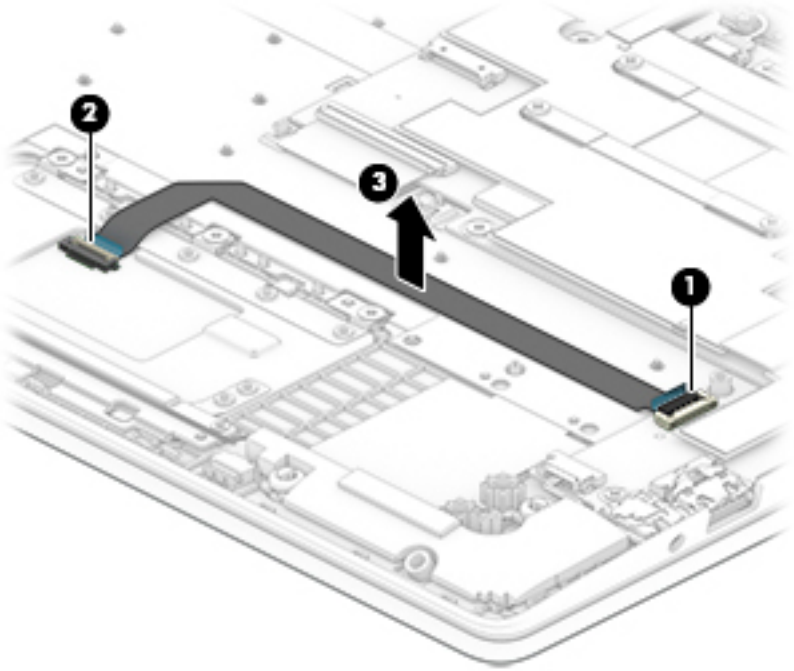

Reverse this procedure to install the TouchPad cable.

TouchPad

Table 5-8 TouchPad description and spare part number information

Description	Spare part number
TouchPad (The TouchPad spare part kit includes the TouchPad bracket, but does not include the TouchPad cable. The TouchPad cable is available using spare part number L52062-001.)	L52058-001

Before removing the TouchPad, follow these steps:

1. Shut down the computer. If you are unsure whether the computer is off or in Hibernation, turn the computer on, and then shut it down through the operating system.
2. Disconnect all external devices connected to the computer.
3. Disconnect the power from the computer by first unplugging the power cord from the AC outlet, and then unplugging the AC adapter from the computer.
4. Remove the bottom cover (see Bottom cover on page 23).
5. Remove the battery (see Battery on page 25).

Remove the TouchPad:

1. Release the ZIF connector **(1)** to which TouchPad cable is connected, and then disconnect the TouchPad cable from the system board.
2. Remove the three Phillips M2.0×2.2 broad head screws **(2)** that secure the TouchPad to the keyboard/top cover.
3. Remove the four Phillips M2.0×3.0 screws **(3)** that secure the TouchPad bracket to the keyboard/top cover.
4. Remove the TouchPad bracket **(4)**.
5. Remove the TouchPad **(5)**.

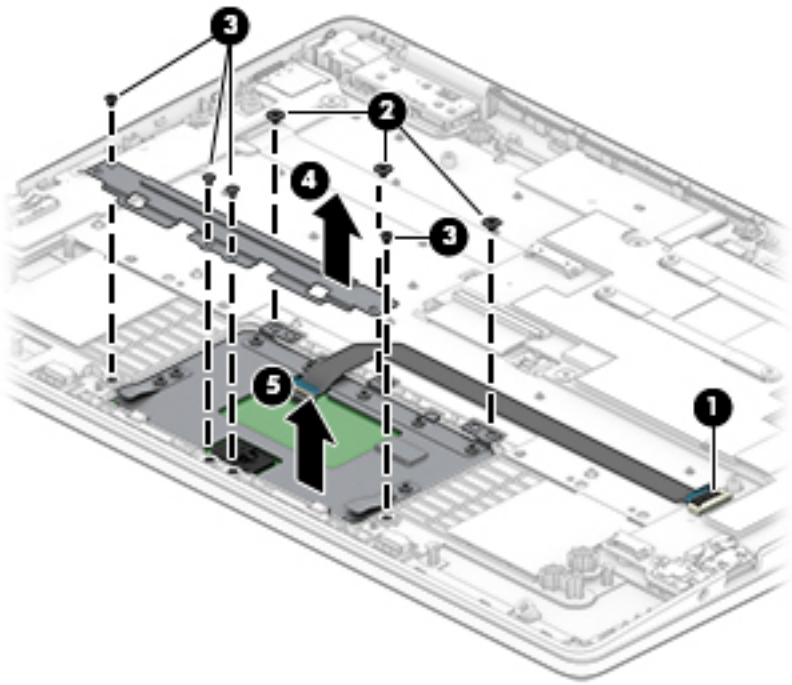

Reverse this procedure to install the TouchPad.

System board

Table 5-9 TouchPad description and spare part number information

Description	Spare part number
• System board equipped with an Intel Pentium N5000 1.10-GHz (SC turbo up to 2.70-GHz) quad core processor (2400-MHz FSB, 4.0-MB L2 cache, 6 W), an Intel UHD Graphics 605 graphics subsystem with UMA memory, and the Windows 10 operating system (includes processor and replacement thermal material)	L52048-601

Before removing the system board, follow these steps:

1. Shut down the computer. If you are unsure whether the computer is off or in Hibernation, turn the computer on, and then shut it down through the operating system.
2. Disconnect all external devices connected to the computer.
3. Disconnect the power from the computer by first unplugging the power cord from the AC outlet, and then unplugging the AC adapter from the computer.
4. Remove the bottom cover (see Bottom cover on page 23).
5. Remove the battery (see Battery on page 25).
6. Remove the solid-state drive (see Solid-state drive on page 29).

When replacing the system board, be sure to remove the following components from the defective system board and install them on the replacement system board:

- WLAN module (see WLAN module on page 30)
- Heat sink (see Heat sink on page 37)
- Memory shield (see Memory shield on page 39)
- USB/audio board cable (see USB/audio board cable on page 40)

Remove the system board:

1. Disconnect the following cables:

   (1) Power connector cable

   (2) Webcam/microphone module ZIF connector cable

   (3) Display panel ZIF connector cable

   (4) WLAN antenna cable

   (5) Speaker cable

   (6) TouchPad ZIF connector cable

   (7) Keyboard ZIF connector cable

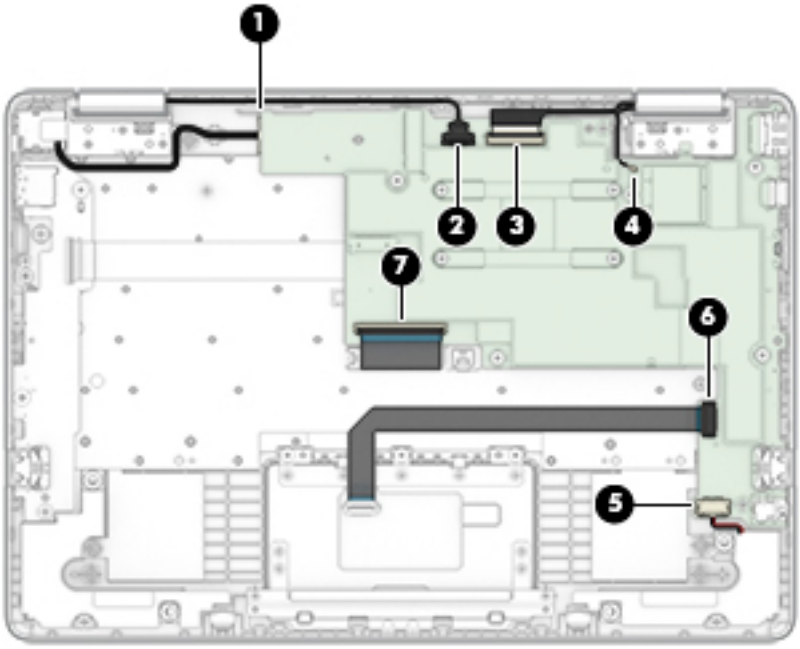

2. Remove the five Phillips M2.0×2.2 broad head screws that secure the system board to the keyboard/top cover.

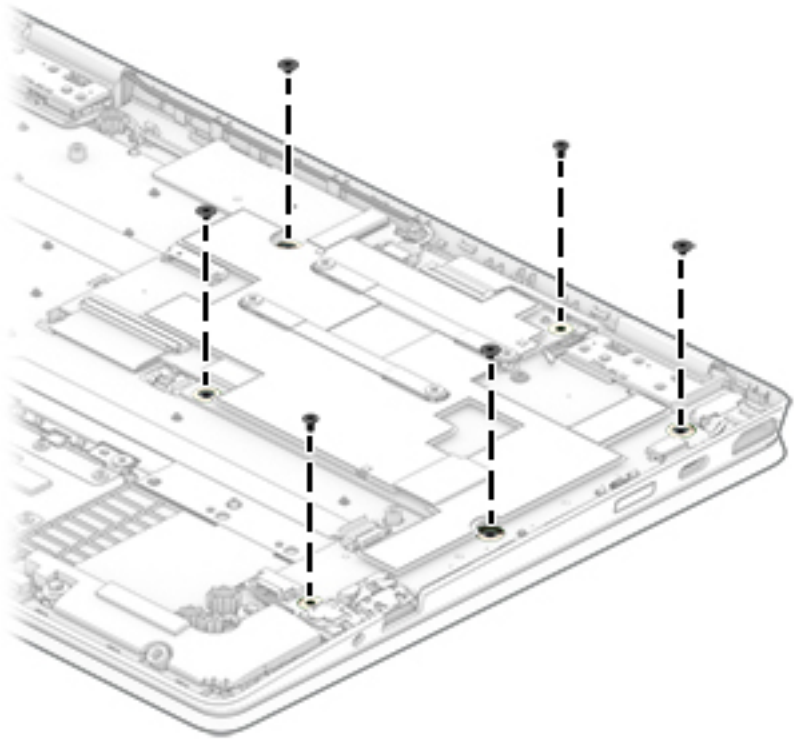

3. Lift the left side of the system board **(1)** until it rests at an angle.

4. Remove the system board **(2)** by sliding it up and to the left at an angle.

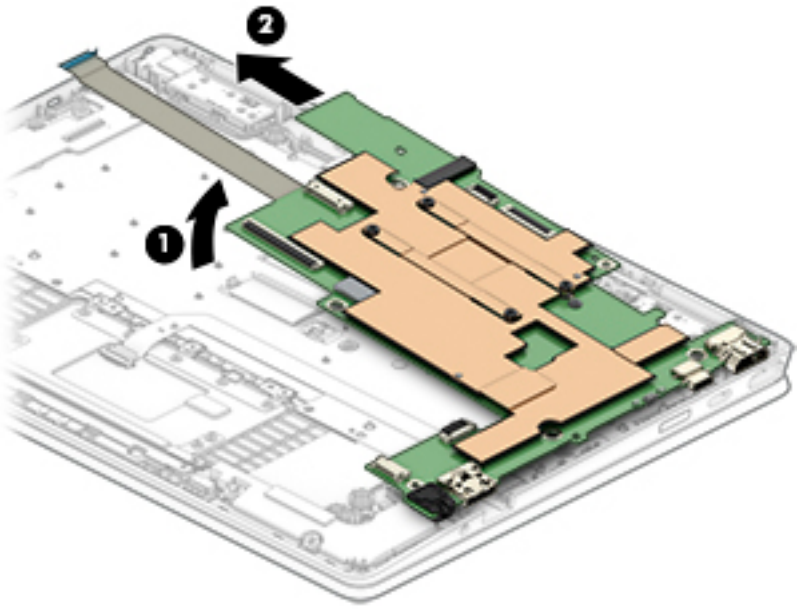

Reverse this procedure to install the system board.

Heat sink

Table 5-10 **Heat sink description and spare part number information**

Description	Spare part number
Heat sink (includes replacement thermal material)	L52065-001

Before removing the heat sink, follow these steps:

1. Turn off the computer. If you are unsure whether the computer is off or in Hibernation, turn the computer on, and then shut it down through the operating system.
2. Disconnect the power from the computer by first unplugging the power cord from the AC outlet, and then unplugging the AC adapter from the computer.
3. Disconnect all external devices from the computer.
4. Remove the bottom cover (see Bottom cover on page 23), and then remove the following components:
   a. Battery (see Battery on page 25)
   b. Solid-state drive (see Battery on page 25)
   c. System board (see System board on page 35)

Remove the heat sink:

1. In the order indicated on the heat sink, remove the four Phillips M2.0×3.0 screws **(1)** that secure the heat sink to the system board.

2. Remove the heat sink (2).

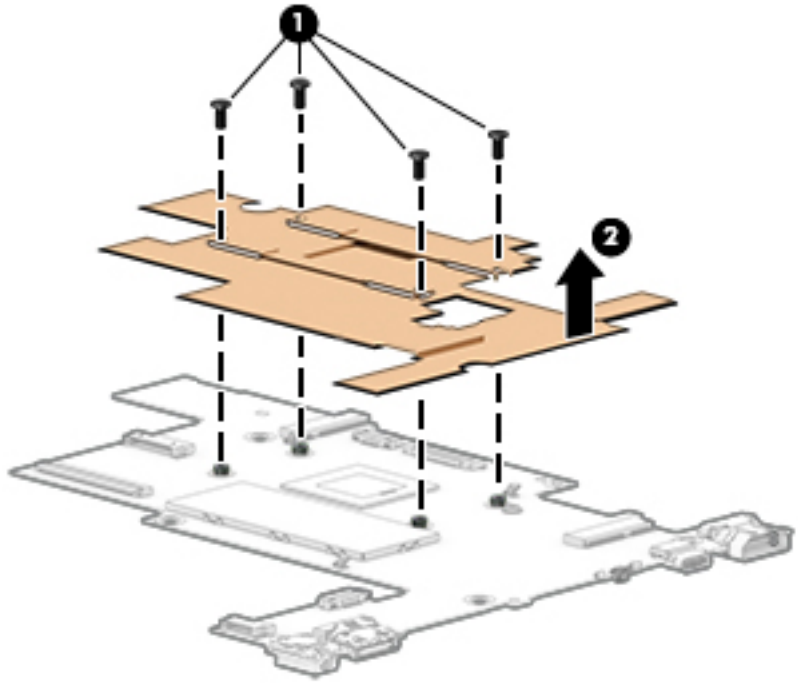

NOTE: The thermal material must be thoroughly cleaned from the surfaces of the heat sink and the system board components each time the heat sink is removed. Replacement thermal material is included with the heat sink and system board spare part kits.

Thermal paste is used on the processor (1) and the heat sink component that services it (2).

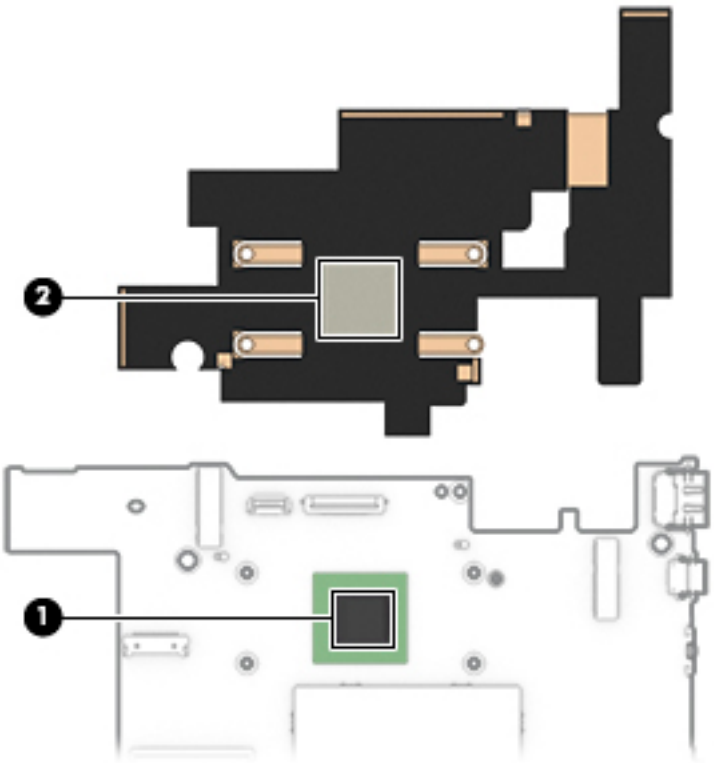

Reverse this procedure to install the heat sink.

Memory shield

Table 5-11 Memory shield description and spare part number information

Description	Spare part number
Memory shield	L52442-001

Before removing the memory shield, follow these steps:

1. Turn off the computer. If you are unsure whether the computer is off or in Hibernation, turn the computer on, and then shut it down through the operating system.
2. Disconnect the power from the computer by first unplugging the power cord from the AC outlet, and then unplugging the AC adapter from the computer.
3. Disconnect all external devices from the computer.
4. Remove the bottom cover (see Bottom cover on page 23), and then remove the following components:
   a. Battery (see Battery on page 25)
   b. Solid-state drive (see Battery on page 25)
   c. System board (see System board on page 35)

Remove the memory shield:

▲ Detach the edges of the memory shield from the retention clips built into the system board, and then remove the memory shield.

⚠ WARNING! The memory shield is constructed of metal and has sharp edges. Exercise care when handling the memory shield to prevent injuries.

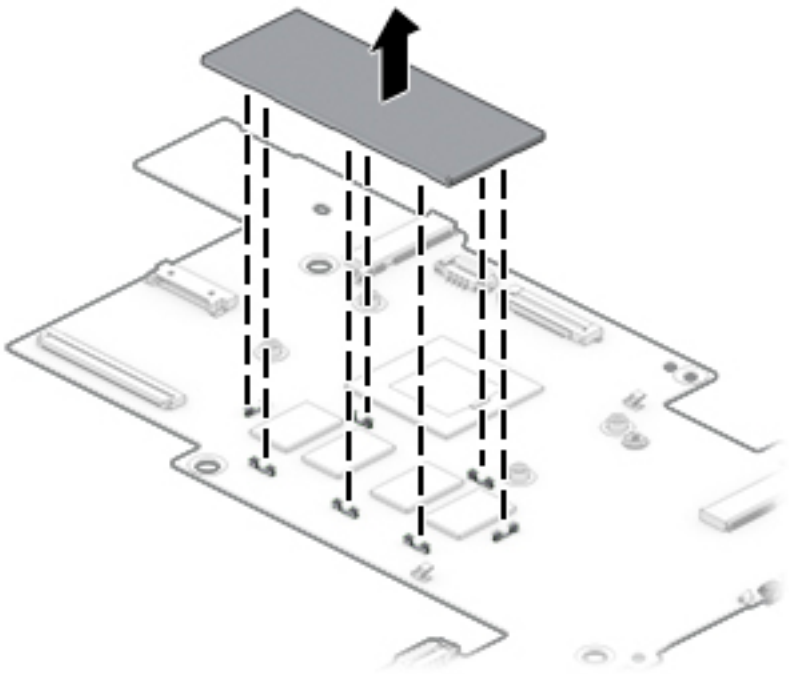

Reverse this procedure to install a memory shield.

USB/audio board cable

NOTE: The USB/audio board spare part kit does not include the USB/audio board cable. The USB/audio board cable is available using spare part number L52063-001.

Before removing the USB/audio board cable, follow these steps:

1. Shut down the computer. If you are unsure whether the computer is off or in Hibernation, turn the computer on, and then shut it down through the operating system.
2. Disconnect all external devices connected to the computer.
3. Disconnect the power from the computer by first unplugging the power cord from the AC outlet, and then unplugging the AC adapter from the computer.
4. Remove the bottom cover (see Bottom cover on page 23), and then remove the following components:
   a. Battery (see Battery on page 25)
   b. Solid-state drive (see Battery on page 25)
   c. System board (see System board on page 35)

Remove the USB/audio board cable:

1. Turn the system board upside down with the rear edge toward you.
2. Release the ZIF connector **(1)** to which USB/audio board cable is connected, and then disconnect the USB/audio board cable from the system board.
3. Remove the USB/audio board cable **(2)**.

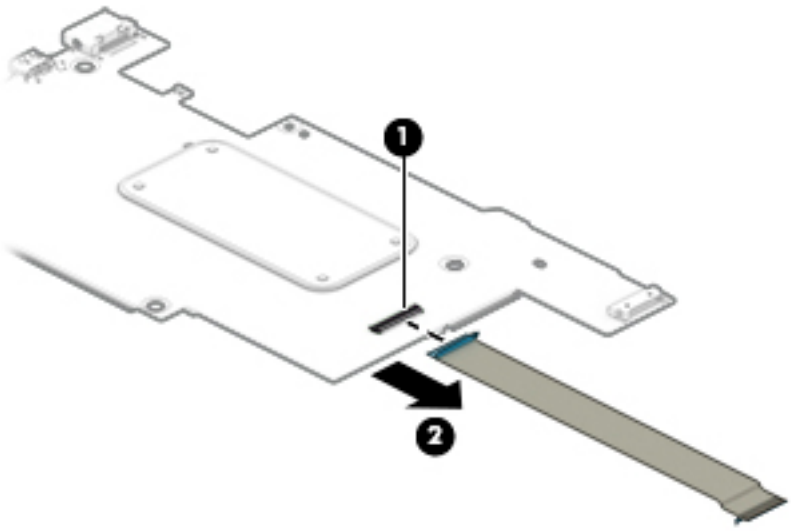

Reverse this procedure to install the USB/audio board cable.

Power button actuator

Table 5-12 Power button actuator description and spare part number information

Description	Spare part number
Power button actuator	L52443-001

Before removing the power button actuator, follow these steps:

1. Shut down the computer. If you are unsure whether the computer is off or in Hibernation, turn the computer on, and then shut it down through the operating system.
2. Disconnect all external devices connected to the computer.
3. Disconnect the power from the computer by first unplugging the power cord from the AC outlet, and then unplugging the AC adapter from the computer.
4. Remove the bottom cover (see Bottom cover on page 23), and then remove the following components:
   a. Battery (see Battery on page 25)
   b. Solid-state drive (see Battery on page 25)
   c. System board (see System board on page 35)

Remove the power button actuator:

1. Release the power button actuator spring arms (1) from the retention tabs (2) built into the keyboard/top cover.
2. Press in on the power button actuator (3) to release it from the keyboard/top cover.

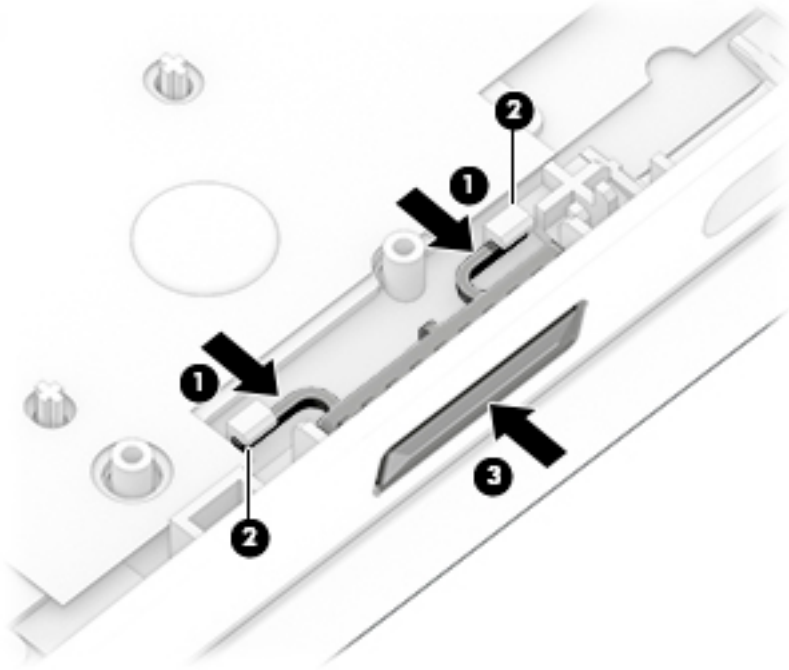

3. Remove the power button actuator.

Reverse this procedure to install the power button actuator.

Display assembly

NOTE: The display assembly is spared at the subcomponent level. For display assembly spare part information, see the individual removal subsections.

Before removing the display assembly, follow these steps:

1. Shut down the computer. If you are unsure whether the computer is off or in Hibernation, turn the computer on, and then shut it down through the operating system.
2. Disconnect all external devices connected to the computer.
3. Disconnect the power from the computer by first unplugging the power cord from the AC outlet, and then unplugging the AC adapter from the computer.
4. Remove the bottom cover (see Bottom cover on page 23).
5. Disconnect the battery cable from the system board (see Battery on page 25).
6. Remove the solid-state drive (see Solid-state drive on page 29).

Remove the display assembly:

1. Release the ZIF connector **(1)** to which webcam/microphone module cable is connected, and then disconnect the webcam/microphone module cable from the system board.
2. Release the ZIF connector **(2)** to which display panel cable is connected, and then disconnect the display panel cable from the system board.
3. Disconnect the WLAN antenna cable **(3)** from the terminal on the WLAN module.
4. Release the webcam/microphone module cable from the retention clips **(4)** and routing channel built into the keyboard/top cover.
5. Release the WLAN antenna cable from the retention clips **(5)** and routing channel built into the keyboard/top cover.

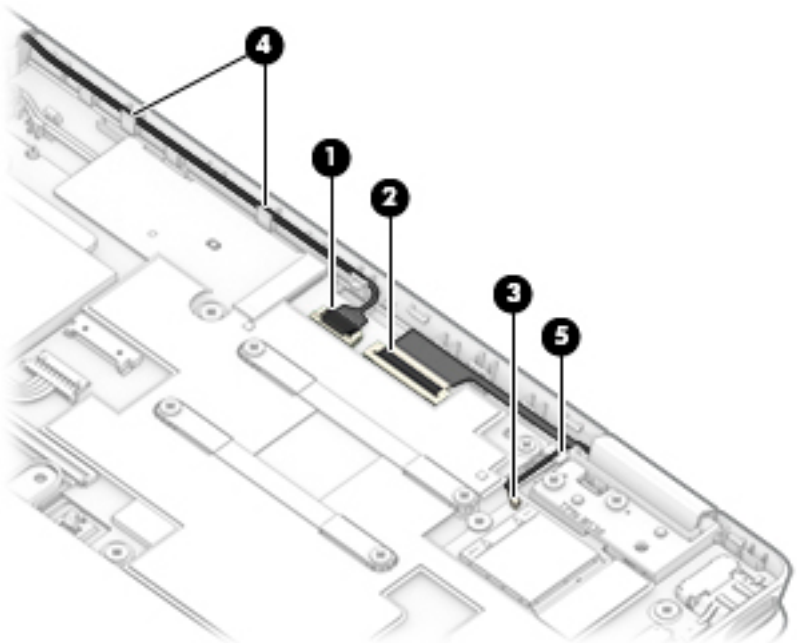

6. Remove the four Phillips M2.5×5.7 screws that secure the display assembly to the keyboard/top cover.

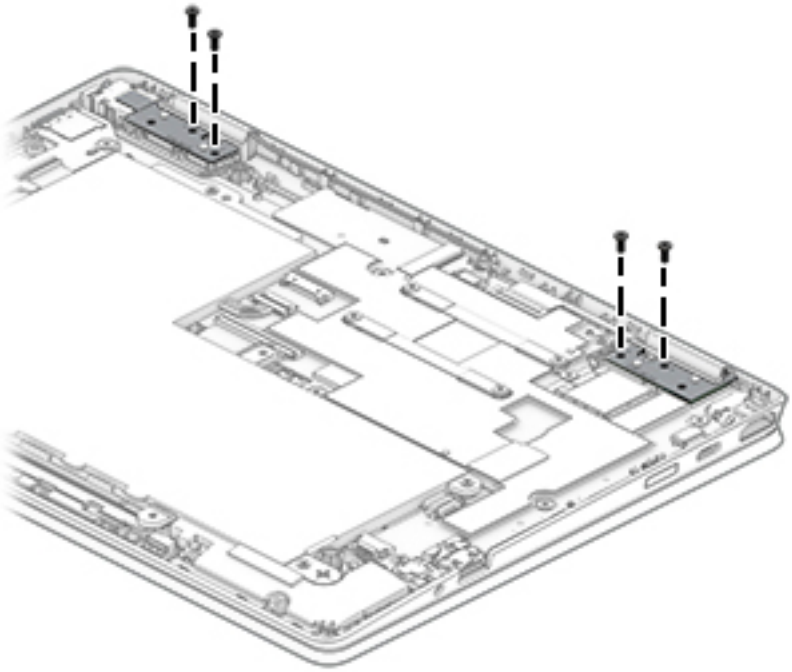

7. Swing the keyboard/top cover **(1)** up and back until the display hinges release from the keyboard/top cover.
8. Separate the keyboard/top cover **(2)** from the display assembly.

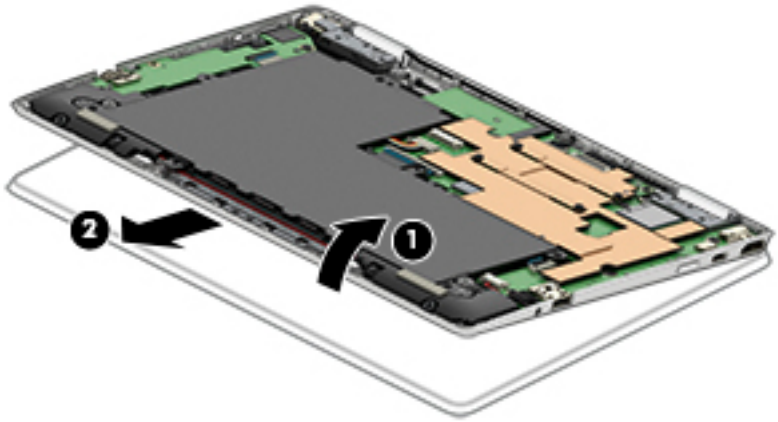

9. If it is necessary to replace the display panel assembly or any of the display assembly subcomponents:
   a. Insert a case utility tool **(1)** or similar thin, plastic tool into the top edge of the display panel assembly.

b. Lift the top edge of the display panel assembly (2) and swing it up and back until it rests in an upright position.

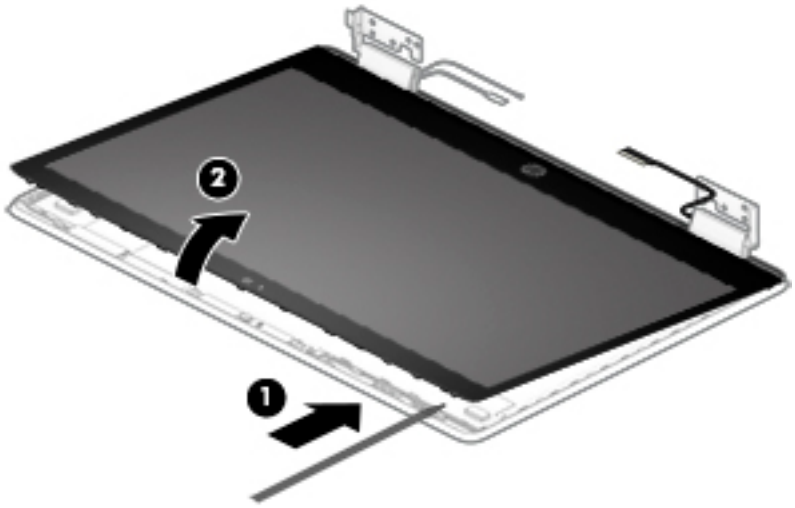

c. Release the adhesive support strip (1) that secures the display panel cable to the display panel assembly.

d. Disconnect the display panel cable (2) from the display panel assembly.

e. Remove the display panel assembly (3).

The display panel assembly is available using spare part number L52049-001.

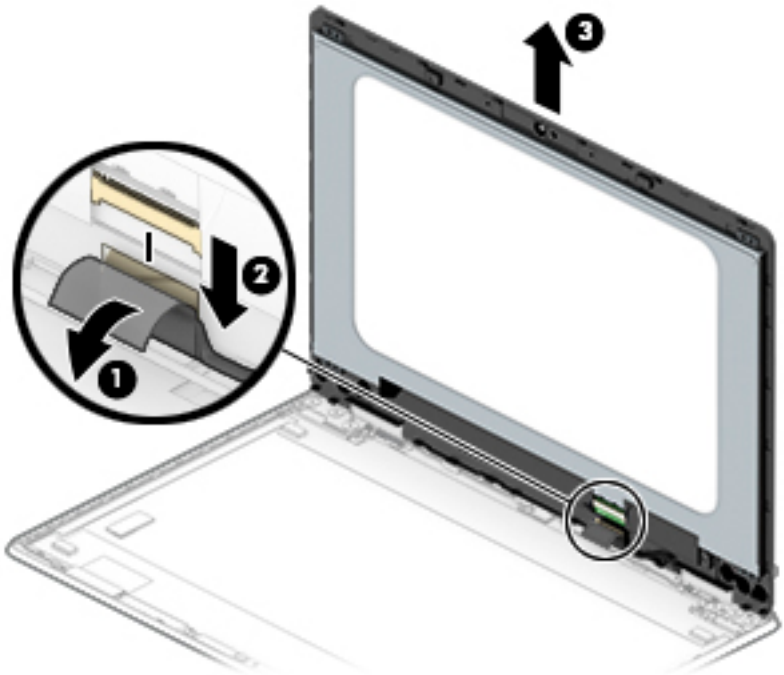

10. If it is necessary to replace the display panel cable:

a. Remove the display panel assembly.

b. Release the display panel cable (1) from the display right hinge.

c. Release the display panel cable from the retention clips **(2)** built into the display back cover.

d. Remove the display panel cable **(3)**.

The display panel cable is available using spare part number L52061-001.

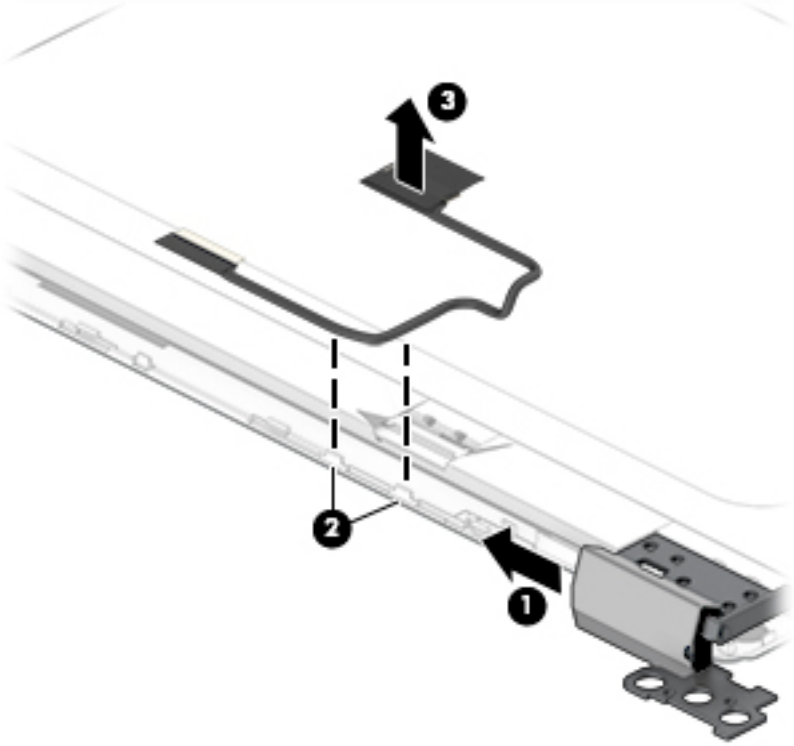

11. If it is necessary to replace the webcam/microphone module:

a. Remove the display panel assembly.

b. Detach the webcam/microphone module **(1)** from the display back cover. (The webcam/microphone module is attached to the display back cover with double-sided adhesive.)

c. Disconnect the EDP cable (2) from the webcam/microphone module.

The webcam/microphone module is available using spare part number L52059-001.

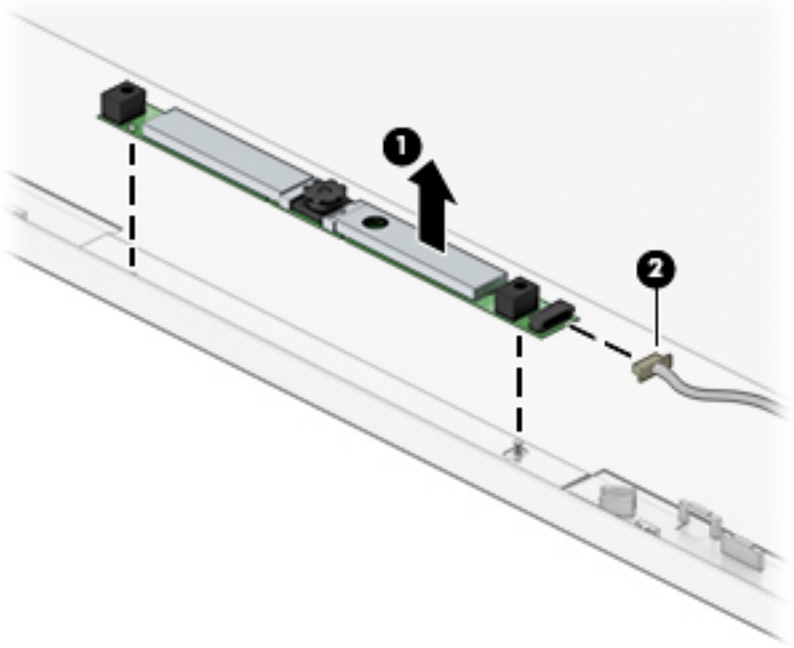

12. If it is necessary to replace the display hinges:

a. Remove the display panel assembly.

b. Remove the six Phillips M2.0×2.8 screws (1) that secure the hinges to the display back cover.

c. Remove the display hinges (2).

The display hinges are available using spare part number L52055-001.

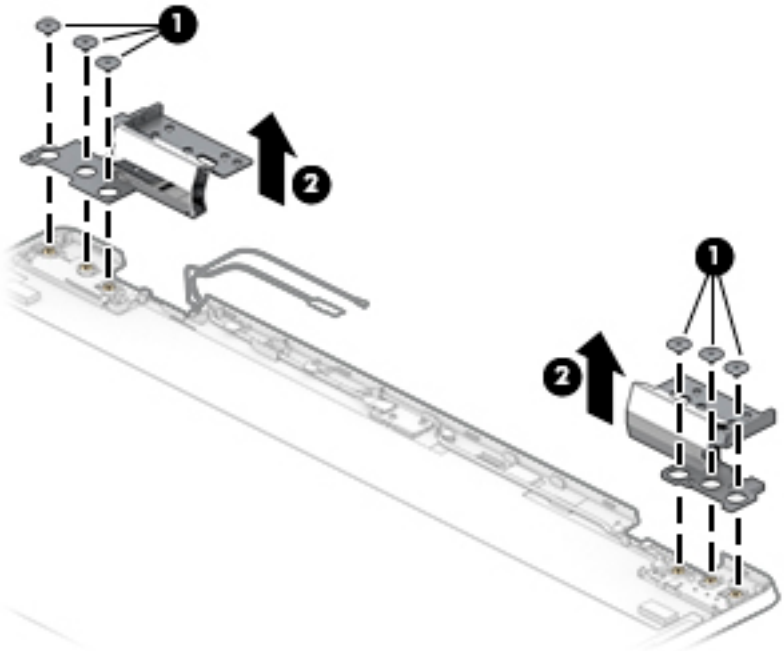

13. If it is necessary to replace the hinge covers, pull up on the side of the hinge covers to remove them.
    a. Remove the display panel assembly.
    b. Remove the hinges.
    c. Remove the two Phillips M2.0×4.2 screws (1) that secure the hinge covers to the display hinges.
    d. Remove the hinge covers (2) from the display hinges.

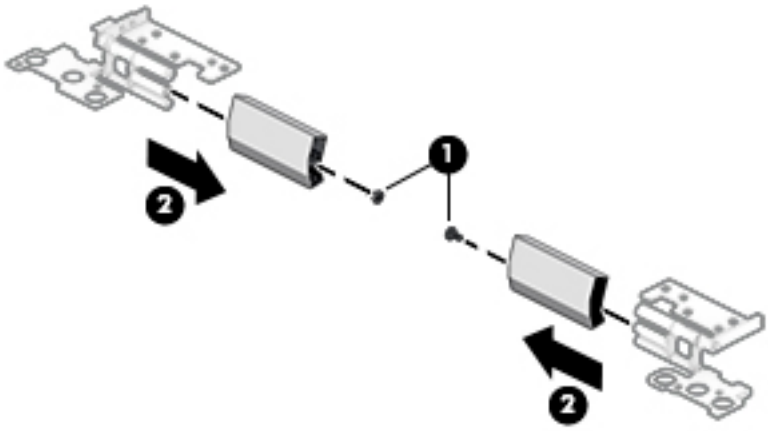

The hinge covers are available using spare part number L52054-001.

14. If it is necessary to replace the wireless antenna:
    a. Remove the display panel assembly.
    b. Detach the wireless antenna transceiver (1) from the display back cover. (The wireless antenna transceiver is attached to the enclosure with double-sided adhesive.)
    c. Release the shielding material (2) that secures the wireless antenna cable to the display back cover.

d. Release the wireless antenna cable from the retention clips **(3)** and routing channel built into the right side of the display back cover.

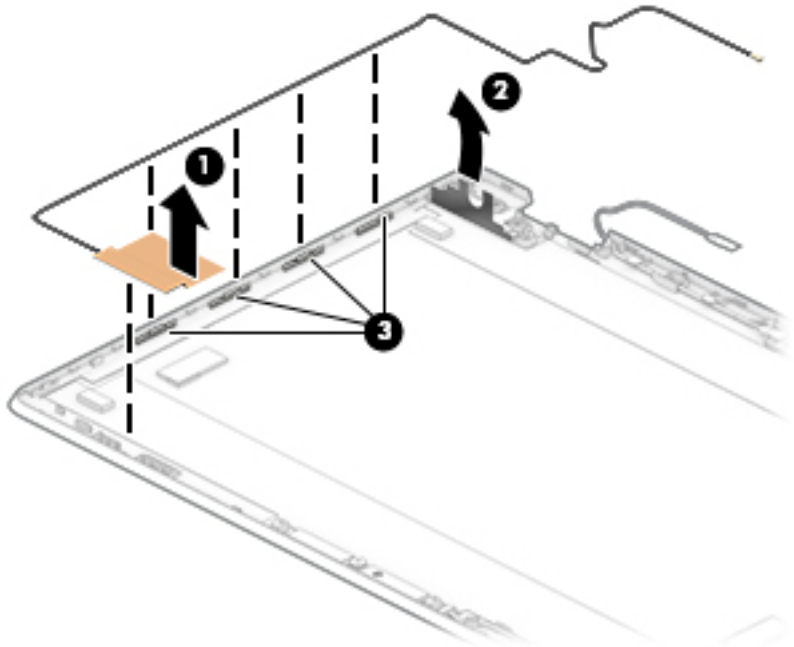

e. Remove the wireless antenna.

   The wireless antenna is available using spare part number L52052-001.

15. If it is necessary to replace the G-sensor module:

    a. Remove the display panel assembly.

    b. Detach the G-sensor module **(1)** from the display back cover. (The G-sensor module is attached to the enclosure with double-sided adhesive.)

    c. Release the adhesive support strip **(2)** that secures the EDP cable to the G-sensor module.

d. Release the ZIF connector (3) to which EDP cable is connected, and then disconnect the EDP cable from the G-sensor module cable.

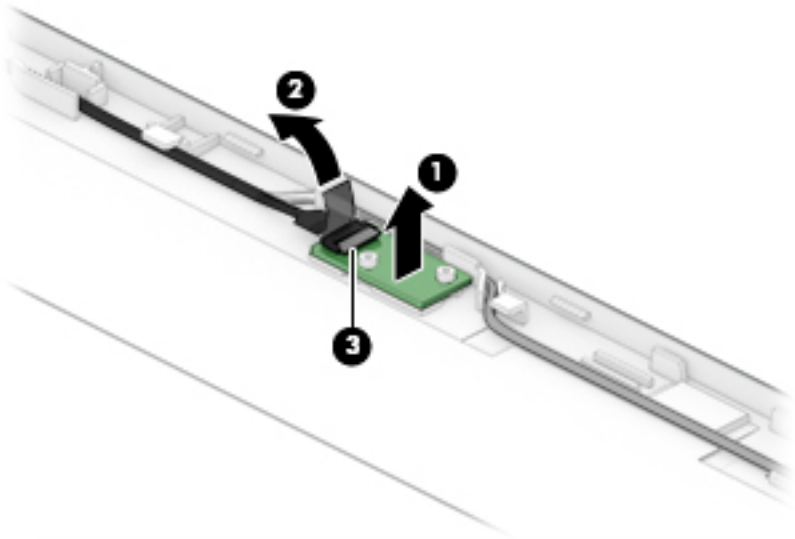

e. Remove the G-sensor module.

   The G-sensor module is available using spare part number L52057-001.

16. If it is necessary to replace the EDP cable:

    a. Remove the display panel assembly.

    b. Remove the display panel cable.

    c. Remove the display left hinge.

    d. Remove the wireless antenna.

    e. Remove the G-sensor module.

    f. Disconnect the EDP cable (1) from the webcam/microphone module.

    g. Release the shielding material (2) that secures the EDP cable to the display back cover.

    h. Release the EDP cable from the retention clips (3) and routing channel built into the left side of the display back cover.

i. Remove the EDP cable **(4)**.

The EDP cable is available using spare part number L52444-001.

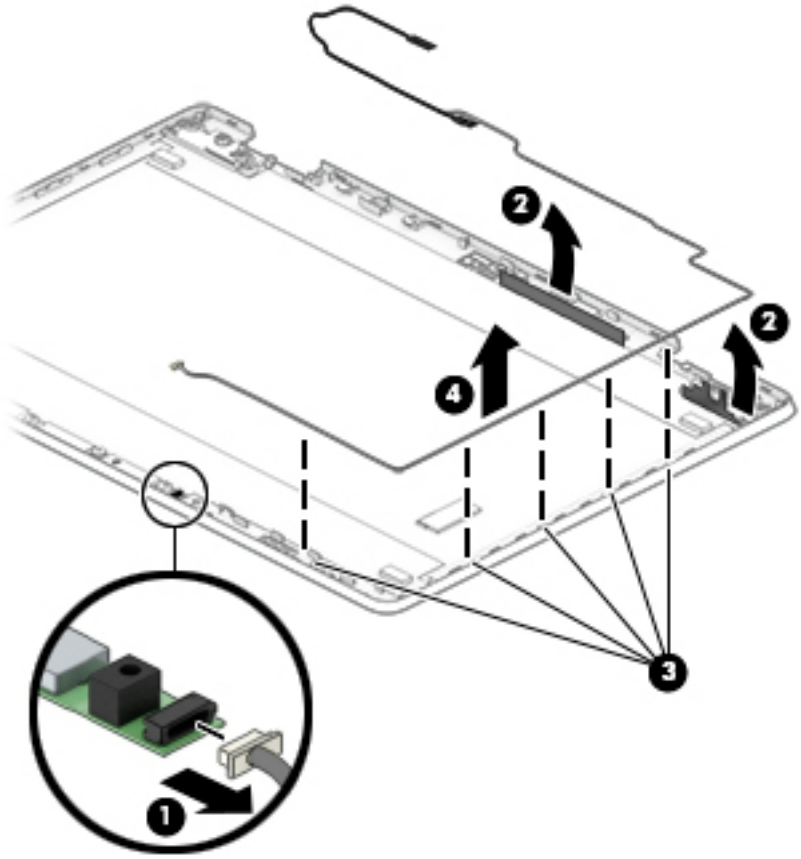

Reverse this procedure to reassemble and install the display assembly.

6 Using Setup Utility (BIOS)

Setup Utility, or Basic Input/Output System (BIOS), controls communication between all the input and output devices on the system (such as disk drives, display, keyboard, mouse, and printer). Setup Utility (BIOS) includes settings for the types of devices installed, the startup sequence of the computer, and the amount of system and extended memory.

NOTE: To start Setup Utility on convertible computers, your computer must be in notebook mode and you must use the keyboard attached to your notebook.

Starting Setup Utility (BIOS)

CAUTION: Use extreme care when making changes in Setup Utility (BIOS). Errors can prevent the computer from operating properly.

▲ Turn on or restart the computer and quickly press f10.

– or –

Turn on or restart the computer, quickly press esc, and then press f10 when the Start menu is displayed.

Updating Setup Utility (BIOS)

Updated versions of Setup Utility (BIOS) may be available on the HP website.

Most BIOS updates on the HP website are packaged in compressed files called SoftPaqs.

Some download packages contain a file named Readme.txt, which contains information regarding installing and troubleshooting the file.

Determining the BIOS version

To decide whether you need to update Setup Utility (BIOS), first determine the BIOS version on the computer.

To reveal the BIOS version information (also known as ROM date and System BIOS), use one of these options.

- HP Support Assistant

1. Type `support` in the taskbar search box, and then select the **HP Support Assistant** app.

   – or –

   Select the question mark icon in the taskbar.

2. Select **My notebook**, and then select **Specifications**.

- Setup Utility (BIOS)

1. Start Setup Utility (BIOS).
2. Select **Main**, and then make note of the BIOS version.
3. Select **Exit**, select one of the options, and then follow the on-screen instructions.

- In Windows, press CTRL+Alt+S.

To check for later BIOS versions, see Downloading a BIOS update on page 52.

Downloading a BIOS update

CAUTION: To reduce the risk of damage to the computer or an unsuccessful installation, download and install a BIOS update only when the computer is connected to reliable external power using the AC adapter. Do not download or install a BIOS update while the computer is running on battery power, docked in an optional docking device, or connected to an optional power source. During the download and installation, follow these instructions:

- Do not disconnect power from the computer by unplugging the power cord from the AC outlet.
- Do not shut down the computer or initiate Sleep.
- Do not insert, remove, connect, or disconnect any device, cable, or cord.

NOTE: If the computer is connected to a network, consult the network administrator before installing any software updates, especially system BIOS updates.

1. Type `support` in the taskbar search box, and then select the **HP Support Assistant** app.

   – or –

   Select the question mark icon in the taskbar.
2. Select **Updates**, and then select **Check for updates and messages**.
3. Follow the on-screen instructions.
4. At the download area, follow these steps:
   a. Identify the most recent BIOS update and compare it to the BIOS version currently installed on the computer. If the update is more recent than the BIOS version, make a note of the date, name, or other identifier. This information may be needed to locate the update later, after it has been downloaded to the computer.
   b. Follow the on-screen instructions to download the BIOS selection. Make a note of the path to the computer location where the BIOS update is downloaded. This path will need to be accessed when installing the update.

BIOS installation procedures vary. Follow any instructions that appear on the screen after the download is complete. If no instructions appear, follow these steps:

1. Type `file` in the taskbar search box, and then select **File Explorer**.
2. Select the storage designation. The storage designation is typically Local Disk (C:).
3. Using the storage path recorded earlier, open the folder that contains the update.
4. Double-click the file that has an .exe extension (for example, filename.exe).

   The BIOS installation begins.
5. Complete the installation by following the on-screen instructions.

NOTE: After a message on the screen reports a successful installation, the downloaded BIOS file can be deleted from the computer.

7 Using HP PC Hardware Diagnostics

Using HP PC Hardware Diagnostics Windows (select products only)

HP PC Hardware Diagnostics Windows is a Windows-based utility that allows you to run diagnostic tests to determine whether the computer hardware is functioning properly. The tool runs within the Windows operating system in order to diagnose hardware failures.

If HP PC Hardware Diagnostics Windows is not installed on your computer, first first first you must download and install it. To download HP PC Hardware Diagnostics Windows, see Downloading HP PC Hardware Diagnostics Windows on page 54.

After HP PC Hardware Diagnostics Windows is installed, follow these steps to access it from HP Help and Support or HP Support Assistant.

1. To access HP PC Hardware Diagnostics Windows from HP Help and Support:

   a. Select the **Start** button, and then select **HP Help and Support**:

   b. Right-click **HP PC Hardware Diagnostics Windows**, select **More**, and then select **Run as administrator**.

   – or –

   To access HP PC Hardware Diagnostics Windows from HP Support Assistant:

   a. Type `support` in the taskbar search box, and then select the **HP Support Assistant** app.

   – or –

   Select the question mark icon in the taskbar.

   b. Select **Troubleshooting and fixes**.

   c. Select **Diagnostics**, and then select **HP PC Hardware Diagnostics Windows**.

2. When the tool opens, select the type of diagnostic test you want to run, and then follow the on-screen instructions.

NOTE: If you need to stop a diagnostic test at any time, select **Cancel**.

When HP PC Hardware Diagnostics Windows detects a failure that requires hardware replacement, a 24-digit Failure ID code is generated. The screen displays one of the following options:

- A Failure ID link is displayed. Select the link and follow the on-screen instructions.
- A Quick Response (QR) code is displayed. With a mobile device, scan the code and then follow the on-screen instructions.
- Instructions for calling support are displayed. Follow those instructions.

Downloading HP PC Hardware Diagnostics Windows

- The HP PC Hardware Diagnostics Windows download instructions are provided in English only.
- You must use a Windows computer to download this tool because only .exe files files files are provided.

Downloading the latest HP PC Hardware Diagnostics Windows version

To download HP PC Hardware Diagnostics Windows, follow these steps:

1. Go to http://www.hp.com/go/techcenter/pcdiags.

   The HP PC Diagnostics home page is displayed.

2. Select **Download HP Diagnostics Windows**, and then select a location on your computer or a USB flash drive.

The tool is downloaded to the selected location.

Downloading HP Hardware Diagnostics Windows by product name or number (select products only)

NOTE: For some products, it may be necessary to download the software to a USB flash drive by using the product name or number.

To download HP PC Hardware Diagnostics Windows by product name or number, follow these steps:

1. Go to http://www.hp.com/support.
2. Select **Get software and drivers**, select your type of product, and then enter the product name or number in the search box that is displayed.
3. In the Diagnostics section, select **Download**, and then follow the on-screen instructions to select the specific Windows diagnostics version to be downloaded to your computer or USB flash drive.

The tool is downloaded to the selected location.

Installing HP PC Hardware Diagnostics Windows

To install HP PC Hardware Diagnostics Windows, follow these steps:

▲ Navigate to the folder on your computer or the USB flash drive where the .exe file was downloaded, double-click the .exe file, and then follow the on-screen instructions.

Using HP PC Hardware Diagnostics UEFI

NOTE: For Windows 10 S computers, you must use a Windows computer and a USB flash drive to download and create the HP UEFI support environment because only .exe files are provided. For more information, see Downloading HP PC Hardware Diagnostics UEFI to a USB flash drive on page 56.

HP PC Hardware Diagnostics UEFI (Unified Extensible Firmware Interface) allows you to run diagnostic tests to determine whether the computer hardware is functioning properly. The tool runs outside the operating system so that it can isolate hardware failures from issues that are caused by the operating system or other software components.

If your PC will not boot into Windows, you can use HP PC Hardware Diagnostics UEFI to diagnose hardware issues.

When HP PC Hardware Diagnostics Windows detects a failure that requires hardware replacement, a 24-digit Failure ID code is generated. For assistance in solving the problem:

- Select **Get Support**, and then use a mobile device to scan the QR code that displays on the next screen. The HP Customer Support - Service Center page displays, with your Failure ID and product number automatically filled in. Follow the on-screen instructions.

  – or –

  Contact support, and provide the Failure ID code.

NOTE: To start diagnostics on a convertible computer, your computer must be in notebook mode, and you must use the attached keyboard.

NOTE: If you need to stop a diagnostic test, press esc.

Starting HP PC Hardware Diagnostics UEFI

To start HP PC Hardware Diagnostics UEFI, follow these steps:

1. Turn on or restart the computer, and quickly press esc.
2. Press f2.

   The BIOS searches three places for the diagnostic tools, in the following order:

   a. Connected USB flash drive

      NOTE: To download the HP PC Hardware Diagnostics UEFI tool to a USB flash drive, see Downloading the latest HP PC Hardware Diagnostics UEFI version on page 56.

   b. Hard drive

   c. BIOS
3. When the diagnostic tool opens, select a language, select the type of diagnostic test you want to run, and then follow the on-screen instructions.

Downloading HP PC Hardware Diagnostics UEFI to a USB flash drive

Downloading HP PC Hardware Diagnostics UEFI to a USB flash drive can be useful in the following situations:

- HP PC Hardware Diagnostics UEFI is not included in the preinstall image.
- HP PC Hardware Diagnostics UEFI is not included in the HP Tool partition.
- The hard drive is damaged.

NOTE: The HP PC Hardware Diagnostics UEFI download instructions are provided in English only, and you must use a Windows computer to download and create the HP UEFI support environment because only .exe files are provided.

Downloading the latest HP PC Hardware Diagnostics UEFI version

To download the latest HP PC Hardware Diagnostics UEFI version to a USB flash drive:

1. Go to http://www.hp.com/go/techcenter/pcdiags.

   The HP PC Diagnostics home page is displayed.

2. Select **Download HP Diagnostics UEFI**, and then select **Run**.

Downloading HP PC Hardware Diagnostics UEFI by product name or number (select products only)

NOTE: For some products, it may be necessary to download the software to a USB flash drive by using the product name or number.

To download HP PC Hardware Diagnostics UEFI by product name or number (select products only) to a USB flash drive:

1. Go to http://www.hp.com/support.
2. Enter the product name or number, select your computer, and then select your operating system.
3. In the **Diagnostics** section, follow the on-screen instructions to select and download the specific UEFI Diagnostics version for your computer.

Using Remote HP PC Hardware Diagnostics UEFI settings (select products only)

Remote HP PC Hardware Diagnostics UEFI is a firmware (BIOS) feature that downloads HP PC Hardware Diagnostics UEFI to your computer. It can then execute the diagnostics on your computer, and it may upload results to a preconfigured server. For more information about Remote HP PC Hardware Diagnostics UEFI, go to http://www.hp.com/go/techcenter/pcdiags, and then select **Find out more**.

Downloading Remote HP PC Hardware Diagnostics UEFI

NOTE: HP Remote PC Hardware Diagnostics UEFI is also available as a Softpaq that can be downloaded to a server.

Downloading the latest Remote HP PC Hardware Diagnostics UEFI version

To download the latest Remote HP PC Hardware Diagnostics UEFI version, follow these steps:

1. Go to http://www.hp.com/go/techcenter/pcdiags.

   The HP PC Diagnostics home page is displayed.

2. Select **Download Remote Diagnostics**, and then select **Run**.

Downloading Remote HP PC Hardware Diagnostics UEFI by product name or number

NOTE: For some products, it may be necessary to download the software by using the product name or number.

To download HP Remote PC Hardware Diagnostics UEFI by product name or number, follow these steps:

1. Go to http://www.hp.com/support.
2. Select **Get software and drivers**, select your type of product, enter the product name or number in the search box that is displayed, select your computer, and then select your operating system.
3. In the **Diagnostics** section, follow the on-screen instructions to select and download the **Remote UEFI** version for the product.

Customizing Remote HP PC Hardware Diagnostics UEFI settings

Using the Remote HP PC Hardware Diagnostics setting in Computer Setup (BIOS), you can perform the following customizations:

- Set a schedule for running diagnostics unattended. You can also start diagnostics immediately in interactive mode by selecting **Execute Remote HP PC Hardware Diagnostics**.
- Set the location for downloading the diagnostic tools. This feature provides access to the tools from the HP website or from a server that has been preconfigured for use. Your computer does not require the traditional local storage (such as a disk drive or USB flash drive) to run remote diagnostics.
- Set a location for storing the test results. You can also set the user name and password settings used for uploads.
- Display status information about the diagnostics run previously.

To customize Remote HP PC Hardware Diagnostics UEFI settings, follow these steps:

1. Turn on or restart the computer, and when the HP logo appears, press f10 to enter Computer Setup.
2. Select **Advanced**, and then select **Settings**.
3. Make your customization selections.
4. Select **Main**, and then Save **Changes and Exit** to save your settings.

Your changes take effect when the computer restarts.

8 Backing up, restoring, and recovering

This chapter provides information about the following processes, which are standard procedure for most products:

- **Backing up your personal information**—You can use Windows tools to back up your personal information (see Using Windows tools on page 59).
- **Creating a restore point**—You can use Windows tools to create a restore point (see Using Windows tools on page 59).
- **Creating recovery media** (select products only)—You can use the HP Cloud Recovery Download Tool (select products only) to create recovery media (see Using the HP Cloud Recovery Download Tool to create recovery media (select products only) on page 59).
- **Restoring and recovery**—Windows offers several options for restoring from backup, refreshing the computer, and resetting the computer to its original state (see Using Windows tools on page 59).

IMPORTANT: If you will be performing recovery procedures on a tablet, the tablet battery must be at least 70% charged before you start the recovery process.

IMPORTANT: For a tablet with a detachable keyboard, connect the tablet to the keyboard base before beginning any recovery process.

Backing up information and creating recovery media

Using Windows tools

IMPORTANT: Windows is the only option that allows you to back up your personal information. Schedule regular backups to avoid information loss.

You can use Windows tools to back up personal information and create system restore points and recovery media.

NOTE: If computer storage is 32 GB or less, Microsoft System Restore is disabled by default.

For more information and steps, see the Get Help app.

1. Select the **Start** button, and then select the **Get Help** app.
2. Enter the task you want to perform.

NOTE: You must be connected to the Internet to access the Get Help app.

Using the HP Cloud Recovery Download Tool to create recovery media (select products only)

You can use the HP Cloud Recovery Download Tool to create HP Recovery media on a bootable USB flash drive.

To download the tool:

▲ Go to the Microsoft Store and search for HP Cloud Recovery.

For details, go to http://www.hp.com/ support, search for HP Cloud Recovery, and then select “HP PCs -- Using the Cloud Recovery Tool (Windows 10,7).”

NOTE: If you cannot create recovery media yourself, contact support to obtain recovery discs. Go to http://www.hp.com/support, select your country or region, and then follow the on-screen instructions.

Restoring and recovery

Restoring, resetting, and refreshing using Windows tools

Windows offers several options for restoring, resetting, and refreshing the computer. For details, see Using Windows tools on page 59.

Recovering using HP Recovery media

HP Recovery media is used to recover the original operating system and software programs that were installed at the factory. On select products, it can be created on a bootable USB flash drive using the HP Cloud Recovery Download Tool. For details, see Using the HP Cloud Recovery Download Tool to create recovery media (select products only) on page 59.

NOTE: If you cannot create recovery media yourself, contact support to obtain recovery discs. Go to http://www.hp.com/support, select your country or region, and then follow the on-screen instructions.

To recover your system:

- Insert the HP Recovery media, and then restart the computer.

Changing the computer boot order

If your computer does not restart using the HP Recovery media, you can change the computer boot order. This is the order of devices listed in BIOS where the computer looks for startup information. You can change the selection to an optical drive or a USB flash drive, depending on the location of your HP Recovery media.

To change the boot order:

IMPORTANT: For a tablet with a detachable keyboard, connect the tablet to the keyboard base before beginning these steps.

1. Insert the HP Recovery media.
2. Access the system **Startup** menu.

   For computers or tablets with keyboards attached:

   - Turn on or restart the computer or tablet, quickly press esc, and then press f9 for boot options.

   For tablets without keyboards:

   - Turn on or restart the tablet, quickly hold down the volume up button, and then select f9.

     – or –

     Turn on or restart the tablet, quickly hold down the volume down button, and then select f9.
3. Select the optical drive or USB flash drive from which you want to boot, and then follow the on-screen instructions.

9 Specifications

Computer specifications

Table 9-1 Computer specifications

	Metric	U.S.
Dimensions		
Width	28.0 cm	11.0 in
Depth	19.5 cm	7.7 in
Height	1.7 cm	0.7 in
Weight	1.21 kg	2.67 lbs
Input power		
Operating voltage and current	19.5 V dc @ 3.33 A – 65 W 19 V dc @ 4.62 A – 90 W 19.5 V dc @ 2.31 – 45 W (select models only)	
Temperature		
Operating	**5°C to 35°C**	41°F to 95°F
Nonoperating	**-20°C to 60°C**	-4°F to 140°F
Relative humidity (noncondensing)		
Operating	10% to 90%	
Nonoperating	5% to 95%	
Maximum altitude (unpressurized)		
Operating	**-15 m to 3,048 m**	-50 ft to 10,000 ft
Nonoperating	**-15 m to 12,192 m**	-50 ft to 40,000 ft

NOTE: Applicable product safety standards specify thermal limits for plastic surfaces. The device operates well within this range of temperatures.

10 Power cord set requirements

The wide-range input feature of the computer permits it to operate from any line voltage from 100 to 120 V AC, or from 220 to 240 V AC.

The 3-conductor power cord set included with the computer meets the requirements for use in the country or region where the equipment is purchased.

Power cord sets for use in other countries or regions must meet the requirements of the country and region where the computer is used.

Requirements for all countries

The following requirements are applicable to all countries and regions:

- The length of the power cord set must be at least 1.0 m (3.3 ft) and no more than 2.0 m (6.5 ft).
- All power cord sets must be approved by an acceptable accredited agency responsible for evaluation in the country or region where the power cord set will be used.
- The power cord sets must have a minimum current capacity of 10 A and a nominal voltage rating of 125 or 250 V AC, as required by the power system of each country or region.
- The appliance coupler must meet the mechanical configuration of an EN 60 320/IEC 320 Standard Sheet C13 connector for mating with the appliance inlet on the back of the computer.

Requirements for specific countries and regions

Table 10-1 Power cord requirements for specific countries

Country/region	Accredited agency	Applicable note number
Argentina	IRAM	1
Australia	SAA	1
Austria	OVE	1
Belgium	CEBEC	1
Brazil	ABNT	1
Canada	CSA	2
Chile	IMQ	1
Denmark	DEMKO	1
Finland	FIMKO	1
France	UTE	1
Germany	VDE	1
India	BIS	1
Israel	SII	1
Italy	IMQ	1
Japan	JIS	3
The Netherlands	KEMA	1
New Zealand	SANZ	1
Norway	NEMKO	1
The People's Republic of China	CCC	4
Saudi Arabia	SASO	7
Singapore	PSB	1
South Africa	SABS	1
South Korea	KTL	5
Sweden	SEMKO	1
Switzerland	SEV	1
Taiwan	BSMI	6
Thailand	TISI	1
The United Kingdom	ASTA	1
The United States	UL	2

1. The flexible cord must be Type H05VV-F, 3-conductor, 0.75 mm² conductor size. Power cord set fittings (appliance coupler and wall plug) must bear the certification mark of the agency responsible for evaluation in the country or region where it will be used.

Table 10-1 Power cord requirements for specific countries (continued)

Country/region	Accredited agency	Applicable note number

2. The flexible cord must be Type SVT/SJT or equivalent, No. 18 AWG, 3-conductor. The wall plug must be a two-pole grounding type with a NEMA 5-15P (15 A, 125 V AC) or NEMA 6-15P (15 A, 250 V AC) configuration. CSA or C-UL mark. UL file number must be on each element.
3. The appliance coupler, flexible cord, and wall plug must bear a “T” mark and registration number in accordance with the Japanese Dentori Law. The flexible cord must be Type VCTF, 3-conductor, 0.75 mm² or 1.25 mm² conductor size. The wall plug must be a two-pole grounding type with a Japanese Industrial Standard C8303 (7 A, 125 V AC) configuration.
4. The flexible cord must be Type RVV, 3-conductor, 0.75 mm² conductor size. Power cord set fittings (appliance coupler and wall plug) must bear the CCC certification mark.
5. The flexible cord must be Type H05VV-F 3-conductor, 0.75 mm² conductor size. KTL logo and individual approval number must be on each element. Corset approval number and logo must be printed on a flag label.
6. The flexible cord must be Type HVCTF 3-conductor, 1.25 mm² conductor size. Power cord set fittings (appliance coupler, cable, and wall plug) must bear the BSMI certification mark.
7. For 127 V AC, the flexible cord must be Type SVT or SJT 3-conductor, 18 AWG, with plug NEMA 5-15P (15 A, 125 V AC), with UL and CSA or C-UL marks. For 240 V AC, the flexible cord must be Type H05VV-F 3-conductor, 0.75 mm² or 1.00 mm2 conductor size, with plug BS 1363/A with BSI or ASTA marks.

11 Recycling

When a non-rechargeable or rechargeable battery has reached the end of its useful life, do not dispose of the battery in general household waste. Follow the local laws and regulations in your area for battery disposal.

HP encourages customers to recycle used electronic hardware, HP original print cartridges, and rechargeable batteries. For more information about recycling programs, see the HP Web site at http://www.hp.com/recycle.

Index

A
AC adapter and battery light 4
AC adapter, spare part number 17
action keys 10
adapters, spare part numbers 17
antenna
  location 7
  removal 47
  spare part number 16, 48
audio, product description 1
audio-in jack 5
audio-out jack 5

B
battery
  removal 25
  spare part number 15, 25
bottom components 11
bottom cover
  removal 23
  spare part number 15, 23
buttons
  left TouchPad 8
  power 5
  right TouchPad 8

C
camera 7
camera light 7
caps lock light 9
chipset, product description 1
components
  bottom 11
  display 7
  keyboard area 8
  left side 5
  right side 4
  TouchPad 8
computer components 14
computer specifications 61

D
display assembly
  components 16
  removal 42
  spare part number 42
display back cover, spare part number 16
display components 7
display panel assembly
  removal 43
  spare part number 16, 44
display panel cable
  removal 44
  spare part number 16, 45
display panel, product description 1

E
EDP cable
  removal 49
  spare part number 16, 50
electrostatic discharge 20
equipment guidelines 22
esc key 10
external media card, product description 1

F
fn key 10

G
G-sensor module
  removal 48
  spare part number 16, 49
graphics, product description 1
grounding guidelines 20
guidelines
  equipment 22
  grounding 20
  packaging 21
  transporting 21
  workstation 21

H
hardware, locating 3
HDMI port 5
HDMI–to–VGA adapter, spare part number 17
headphone jack 5
heat sink
  removal 37
  spare part number 15, 37
hinge
  removal 46
  spare part number 16, 46
hinge cover
  removal 47
  spare part number 16, 47

I
internal card expansion, product description 1
internal microphones 7

J
jacks
  audio-in 5
  audio-out 5
  headphone 5
  microphone 5

K
keyboard/top cover, spare part numbers 15
keys
  action 10
  esc 10
  fn 10
  Windows 10

L
labels
  serial number 12
  service 12
left-side components 5
lights
  AC adapter and battery 4
  camera 7
  caps lock 9
  mute 9
  power 5

M
memory card reader 4

memory shield
removal 39
spare part number 15, 39
memory, product description 1
microphone
product description 1
microphone jack 5
model name 1
mute light 9

O
operating system, product description 2

P
packaging guidelines 21
pen tip, spare part number 17
pen, spare part number 17
ports
HDMI 5
product description 1
USB 4, 5
USB Type-C 5
power button 5
power button actuator
removal 41
spare part number 15, 41
power connector 4
power connector cable
removal 32
spare part number 15, 32
power cord
requirements for all countries 62
requirements for specific countries and regions 63
set requirements 62
spare part number 17
power lights 5
power requirements, product description 1
processor, product description 1
product description
audio 1
chipset 1
display panel 1
external media card 1
graphics 1
internal card expansion 1
memory 1
microphone 1
operating system 2
ports 1
power requirements 1
processors 1
product name 1
security 1
sensors 1
solid-state drive 1
storage 1
video 1
wireless 1
product name 1
product name and number, computer 12

R
removal/replacement procedures 23
right-side components 4
rubber feet
removal 23
spare part number 23
Rubber Foot Kit, spare part number 15, 17

S
Screw Kit, spare part number 17
security cable slot 4
security, product description 1
sensors, product description 1
serial number, computer 12
service labels, locating 12
software
locating 3
software installed
locating 3
solid-state drive
product description 1
removal 29
spare part numbers 15, 29
solid-state drive shield
spare part number 15, 29
speakers
location 11
removal 26
spare part number 15, 26
special keys, using 10
specifications
computer 61
system board
removal 35
spare part number 15, 35

T
TouchPad
components 8
removal 34
spare part number 15, 34
TouchPad bracket
removal 34
TouchPad buttons 8
TouchPad cable
removal 33
spare part number 15, 33
TouchPad zone 8
transporting guidelines 21

U
USB port 4, 5
USB Type-C port 5
USB-C–to–RJ45 adapter, spare part number 17
USB-C–to–USB-A adapter, spare part number 17
USB/audio board
removal 27
spare part number 15, 27
USB/audio board cable
removal 40
spare part number 15, 27, 40
USB–to–Gigabit RJ45 adapter, spare part number 17

V
video, product description 1

W
webcam/microphone module
removal 45
spare part number 16, 46
Windows key 10
wireless antenna
location 7
removal 47
spare part number 16, 48
wireless, product description 1
WLAN antenna
location 7
removal 47
spare part number 16, 48

WLAN module
removal 30
spare part number 15, 30
workstation guidelines 21