HP Jet Fusion 5400 Series 3D Printer

Product Documentation
Introductory Information

© Copyright 2023-2024 HP Development Company, L.P.

Edition 1

Legal notices

The information contained herein is subject to change without notice.

The only warranties for HP products and services are set forth in the express warranty statement accompanying such products and services. Nothing herein should be construed as constituting an additional warranty. HP shall not be liable for technical or editorial errors or omissions contained herein.

Table of contents

HP Jet Fusion 5400 Series3D Printer

Introductory Information 1
Legal notices 1
Safety precautions 1
Warning labels 5
Emergency stop buttons 8
Front panel 9
System errors 10
Power specifications 11

HP Jet Fusion 5400 Series 3D Printer

Introductory Information

What is it?

Your HP Jet Fusion 3D Printer is a device designed to produce prototypes and truly functional parts with optimal mechanical properties that match your design. HP fusing and detailing agents work with HP Multi Jet Fusion technology and materials to deliver fine details and dimensional accuracy. The accurate thermal control of every layer enables predictive corrections voxel by voxel for optimal mechanical properties.

This document is a supplement to the main HP Jet Fusion 3D Printing Solution documentation. It includes legal notices, safety precautions, front panel description, system error notice, and power specifications.

Where is the user guide?

You can download the user guide for your printer from:

- http://www.hp.com/go/jetfusion3D5200/manuals/
- http://www.hp.com/go/jetfusion3D5420W/manuals

Further information is available from:

- http://www.hp.com/go/jetfusion3D5200/support/
- http://www.hp.com/go/jetfusion3D5420W/support

For more information, see your HP Jet Fusion 3D Printing Solution documentation.

Legal notices

© Copyright 2023 HP Development Company, L.P.

The information contained herein is subject to change without notice. The only warranties for HP products and services are set forth in the express warranty statement accompanying such products and services. Nothing herein should be construed as constituting an additional warranty.

HP shall not be liable for technical or editorial errors or omissions contained herein.

Safety precautions

Before using the printer, read the following safety precautions and operating instructions to make sure you use it safely.

You are expected to have the appropriate technical training and experience necessary to be aware of hazards to which you may be exposed in performing a task, and to take appropriate measures to minimize the risks to yourself and to others.

Perform the recommended maintenance and cleaning tasks to ensure the correct and safe operation of your printer.

Operations must be supervised at all times.

The printer is stationary and should be located in a restricted-access area, for authorized personnel only.

General safety guidelines

Turn off all equipment, using the branch circuit breakers located in the building's Power Distribution Unit (PDU), and call your service representative in any of the following cases:

- The power cord is damaged.
- The top heating and fusing lamp enclosures are damaged, the glass is missing or broken, or the sealing is defective.

- The equipment has been damaged by an impact.
- Liquid has entered the equipment.
- There is smoke or an unusual smell coming from the equipment.
- The built-in Residual Current Circuit Breaker (Ground Fault Circuit Interrupter) has been repeatedly tripped.
- Fuses have blown.
- The equipment is not operating normally.
- There is any mechanical or enclosure damage.

Turn off the equipment using the branch circuit breakers in either of the following cases:

- During a thunderstorm
- During a power failure

Take special care with zones marked with warning labels.

Use HP-certified and HP-branded material and agents only. Do not use unauthorized third-party material or agents.

In case of unexpected malfunction, anomaly, ESD (ElectroStatic Discharges), or electromagnetic interference, press the emergency stop button and disconnect the equipment. If the problem persists, contact your support representative.

The print-production area in which the equipment is installed should be free from liquid spillage and environmental condensation.

The printer, build unit, and processing station should always be kept in the same environmental conditions.

Ensure that there is no condensation inside the equipment before turning it on.

Final parts/builds

The customer assumes all risk relating to or arising from the 3D printed parts.

The customer is solely responsible for the evaluation of and determination of the suitability and compliance with applicable regulations of the products and/or 3D printed parts for any use, especially for uses (including but not limited to medical/dental, food contact, automotive, heavy industry, and consumer products) that are regulated by US, EU, and other applicable governments.

Explosion hazard

WARNING! Dust clouds can form explosive mixtures with air. Take precautionary measures against static charges, and keep away from sources of ignition.

NOTICE: The equipment is not intended for hazardous locations or ATEX classified zones: ordinary locations only.

To avoid the risk of explosion, take the following precautions:

- Smoking, candles, welding, and open flames should be forbidden close to the equipment or material storage area.
- Inside and outside the equipment should be cleaned regularly with an explosion-proof vacuum cleaner to avoid dust accumulation. Do not sweep the dust or or try to remove it with a compressed-air gun.
- An explosion-proof vacuum cleaner is required for cleaning (because of combustible dust). Take measures to mitigate material spillage and avoid potential ignition sources such as ESD (ElectroStatic Discharges), flames, and sparks. Do not smoke nearby.
- The equipment and accessories must be properly grounded at mains outlets only; do not manipulate internal bonding. If static discharges or electrical sparks are noticed, stop operation, disconnect the equipment, and contact your support representative.
- Check the air filters and the sealing of the heating lamps regularly. Do not remove filters or lamp glasses.
- Use HP-certified and HP-branded material and agents only. Do not use unauthorized third-party material or third-party agents.
- HP recommends the use of HP accessories for unpacking 3D parts and refilling the build chamber. If other methods are used, read the following notes:
  - Dust clouds generated during handling and/or storage can form explosive mixtures with air. Dust explosion characteristics vary with the particle size, particle shape, moisture content, contaminants, and other variables.
  - Check that all equipment is properly grounded and installed to satisfy electrical classification requirements. As with any dry material, pouring this material or allowing it to fall freely or be conveyed through chutes or pipes can accumulate and generate electrostatic sparks, potentially causing ignition of the material itself, or of any flammable materials which may come into contact with the material or its container.

- Material storage, handling, and disposal as per local laws. Follow your Environmental Health and Safety processes and procedures. For further information, see the Safety Data Sheets (SDS), which you can find at http://www.hp.com/go/msds.
- Do not place the equipment in a hazardous location area, keep separated from other equipment that could create a combustible dust cloud during its operation.
- Auxiliary post-processing equipment, as sand blasting, must be suitable for combustible dust.
- Stop operation immediately if sparks or material spillages are seen, and call your HP service representative before continuing.
- All personnel, when handling combustible dust, should be free of static electricity by means of using conductive or dissipative footwear and clothing and conducting floor.

Electrical shock hazard

WARNING! The internal circuits inside the e-cabinet, top heating, fusing lamps, build unit, and processing station operate at hazardous voltages capable of causing death or serious personal injury.

Turn off the equipment before servicing, using the branch circuit breakers located in the building's Power Distribution Unit (PDU). The equipment should be connected to earth at mains outlets only.

To avoid the risk of electric shock:

- Do not attempt to dismantle the internal circuit enclosures, top heating, fusing lamps, build unit, processing station, or e-cabinet except during hardware maintenance tasks. In that case, follow the instructions strictly.
- Do not remove or open any other closed system covers or plugs.
- Do not insert objects through slots in the equipment.
- Test the functionality of the Residual Current Circuit Breaker (RCCB) every year (see the procedure below).

NOTE: A blown fuse may indicate malfunctioning electrical circuits within the system. Call your service representative, and do not attempt to replace the fuse yourself.

Checking the functionality of the Residual Current Circuit Breakers (RCCBs)

Following standard Residual Current Circuit Breaker (RCCB) recommendations, it is recommended that the RCCBs are tested on a yearly basis. The procedure is as follows:

1. Turn off the equipment from the front panel, not using the main switch.
2. Once the computer is off, test that the RCCB works correctly by pressing the test button.
   - If the RCCB does not trip when the test button is pressed, this indicates that it has failed. The RCCB must be replaced for safety reasons; call your service representative to remove and replace the RCCB.
   - If the RCCB trips, this indicates it is working correctly; reset the RCCB to its normal on state.

Heat hazard

The top heating, fusing, and build chamber subsystems of the printer operate at high temperatures and can cause burns if touched. To avoid personal injury, take the following precautions:

- Take special care when accessing the printing area. Let the printer cool down before you open the covers.
- Take special care with zones marked with warning labels.
- Do not place objects inside the equipment while operating.
- Do not cover enclosures while operating.
- Remember to let the equipment cool down before performing some maintenance operations.
- Wait for at least the minimum cooling time before extracting the build unit from the printer after printing, or unpacking parts from the build unit.

Fire hazard

The top heating, fusing, and build chamber subsystems of the printer operate at high temperatures. Call your service representative if the built-in Residual Current Circuit Breaker (Ground Fault Circuit Interrupter) is repeatedly tripped.

To avoid the risk of fire, take the following precautions:

- Use the power supply voltage specified on the nameplate.
- Connect the power cord to a dedicated line, protected by a branch circuit breaker according to the information detailed in the site preparation guide.

- Do not insert objects through slots in the equipment.
- Take care not to spill liquid on the equipment. After cleaning, make sure all components are dry before using the equipment again.
- Do not use aerosol products that contain flammable gases inside or around the equipment. Do not operate the equipment in an explosive atmosphere.
- Do not block or cover the openings of the equipment.
- Do not attempt to modify the top heating, fusing, build chamber, e-cabinet, or enclosures.
- Proper maintenance and genuine HP consumables are required to ensure that the equipment operates safely as designed. The use of non-HP consumables may present a risk of fire.
- Take special care with zones marked with warning labels.
- Do not place objects covering top cover, enclosures, or air ventilation.
- Do not leave tools or other materials inside equipment after maintenance or servicing.

Suitable materials for fire-fighting include carbon dioxide, water spray, dry chemicals, or foam.

CAUTION: Do not use a jet of water, as it could scatter and spread the fire.

WARNING! Depending on the material used, some unhealthy substances can be released into the air in case of incidental fire. Wear self-contained pressure-demand breathing apparatus and full protective gear. Your EHS specialist should consult the Safety Data Sheet (SDS) about each material, available at http://www.hp.com/go/msds, and advice on the appropriate measures for your location.

Mechanical hazard

The equipment has moving parts that could cause injury. To avoid personal injury, take the following precautions when working close to the equipment.

- Keep your clothing and all parts of your body away from moving parts.
- Avoid wearing necklaces, bracelets, and other hanging objects.
- If your hair is long, try to secure it so that it will not fall into the equipment.
- Take care that sleeves or gloves do not get caught in moving parts.
- Avoid standing close to the fans, which could cause injury and could also affect print quality (by obstructing the air flow).
- Do not operate the equipment with covers bypassed.

Light radiation hazard

Infrared (IR) radiation is emitted from the top heating and fusing lamps. The enclosures limit radiation in compliance with the requirements of the exempt group of IEC 62471:2006, *Photobiological safety of lamps and lamp systems*. Do not modify the top cover enclosure, nor the glasses or windows.

Chemical hazard

See the Safety Data Sheets available at http://www.hp.com/go/msds to identify the chemical ingredients of your consumables (material and agents). Sufficient ventilation needs to be provided to ensure that potential airborne exposure to these substances is adequately controlled. Consult your usual air conditioning or EHS specialist for advice on the appropriate measures for your location.

Ventilation

Fresh air ventilation is needed to maintain comfort levels. For a more prescriptive approach to adequate ventilation, you could refer to the latest edition of the ANSI/ASHRAE (American Society of Heating, Refrigerating and Air-Conditioning Engineers) document *Ventilation for Acceptable Indoor Air Quality*.

Adequate ventilation needs to be provided to ensure that potential airborne exposure to materials and agents is adequately controlled according to their Safety Data Sheets.

Ventilation should meet local environmental, health, and safety (EHS) guidelines and regulations.

Follow the ventilation recommendations according to the **Ventilation** section in the *Site Preparation Guide*.

NOTE: The ventilation units should not blow air directly onto the equipment.

Air conditioning

Air conditioning in the work area should take into account that the equipment produces heat. Typically, the printer's power dissipation is about 13 kW (44.3 kBTU/h). About 70 % of this power is removed throughout the exhaust connection.

Air conditioning should meet local environmental, health, and safety (EHS) guidelines and regulations.

NOTE: The air conditioning units should not blow air directly onto the equipment.

Sound pressure level

The emitted sound pressure level could exceed 70 dB(A) in certain print modes and user positions. The maximum emitted sound pressure level is below 80 dB(A) during printing (measurements according to ISO 11202). Hearing protection may be required as per local laws; consult your EHS specialist.

Build unit transport hazard

Special care must be taken to avoid personal injury when moving the build unit.

- Always wear personal protective equipment including boots and gloves.
- Keep the safety lid on top of the build unit at all times, except when it is inside the printer or processing station.
- Steer the build unit using the handle only.
- Move the build unit over smooth, flat surfaces without steps.
- Move with care and avoid shocks during transport, which could spill the material.
- Lock the front casters when not moving the build unit. Remember to unlock them before moving it.

If moving the build unit between different rooms, bear in mind that it should be kept in constant environmental conditions.

3D part unpacking

Wear heat-resistant gloves when unpacking 3D printed parts.

Personal protective equipment

Heat-resistant gloves, masks, goggles, conductive or dissipative footwear, conductive or dissipative clothing and hearing protection are recommended for certain maintenance tasks and material handling.

Use of tools

- **Users:** Daily operations including printer settings, printing, unpacking and refilling, replacement of agent reservoirs, and daily checks. No tool is required.
- **Maintenance personnel:** Hardware maintenance tasks and replacement of Customer Self-Replaceable (CSR) parts may require a screwdriver.

NOTE: During installation, the designated personnel receive training for the safe operation and maintenance of the equipment, which should not be used without this training.

Warning labels

Label	Explanation
	Electric shock hazard Heating modules operate at hazardous voltage. Disconnect power source before servicing. CAUTION: Double pole. Neutral fusing. Refer servicing to qualified service personnel. In case of operation of the fuse, parts of the equipment that remain energized may represent a hazard during servicing. Before servicing, turn off the equipment using the Branch Circuit Breakers located in the building's Power Distribution Unit (PDU). WARNING! High leakage current. Current leakage may exceed 3.5 mA. Earth connection essential before connecting supply. Equipment to be connected to earthed mains only. See installation instructions before connecting to the supply. Ensure that the input voltage is within the equipment's rated voltage range.

Label	Explanation
For service personnel only	**Before starting** Read and follow the operating and safety instructions before starting the equipment.
	Risk of burns. Let the equipment cool down before accessing internal parts.
	You are recommended to wear gloves when handling material cartridges, agents, printheads, the printhead cleaning roll, when performing maintenance cleaning tasks, and when unpacking parts in the processing station.
	You are recommended to wear a safety mask when replacing filters.
	You are recommended to wear safety goggles when replacing filters.
	Do not step over the support platform of the material cartridges.
	Do not climb onto the external tank, which could cause the processing station to fall over.
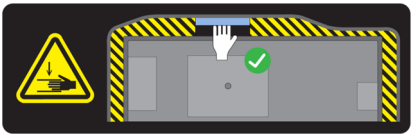	Crush hazard. Keep your hands clear of the edge of the top cover. Open and close the top cover using the handle (highlighted in blue) only.

Label	Explanation
	WARNING! Dust clouds can form explosive mixtures with air. Take precautionary measures against static charges, and keep away from sources of ignition. No smoking, matches, or open flames close to equipment or material storage area.
	An explosion-proof vacuum cleaner is required for cleaning because of combustible dust. Take measures to mitigate material spillage and avoid potential ignition sources such as ESD (ElectroStatic Discharges), flames, and sparks. Do not smoke nearby. Disposal as per local laws.
 For maintenance and service personnel only	Electric shock hazard. Disconnect power before servicing. Heating modules and electrical cabinets operate at hazardous voltage.
 For maintenance and service personnel only	Hazardous moving parts. Keep away from moving fan blades.
 For maintenance and service personnel only	Risk of trapped fingers. Do not touch gears while moving: your hands may be trapped between the gearwheels.
 For service personnel only	Hazardous moving part. Keep away from the moving print carriage and cable/hose carriers. When printing, the print carriage travels back and forth.

Label	Explanation
	Identifies the Protective Earth (PE) terminal for qualified electricians, and bonding terminals for maintenance/service personnel only. An earth connection is essential before connecting to the supply.
	Do not disconnect the hoses during the purging process.
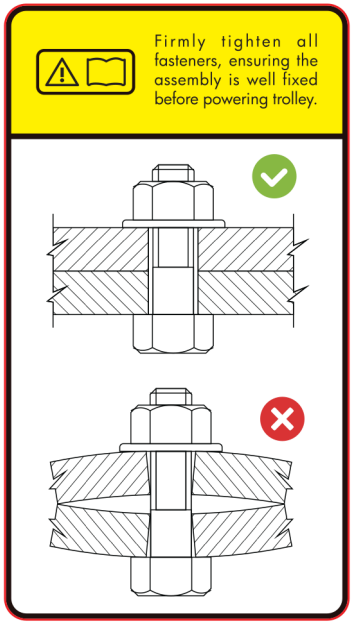	Firmly tighten all fasteners, ensuring the assembly is well fixed before you switch on the build unit.

Emergency stop buttons

There is an emergency stop button on the printer and another on the processing station. If an emergency occurs, simply push the emergency stop button to stop all processes.

- In the printer: The printer carriage, the recoater, the lamps, and the build unit are halted; the build-unit door and top cover are locked until the internal temperature decreases.

A system error message is displayed, and the fans turn at maximum speed. Ensure that the emergency stop button is released before restarting the equipment.

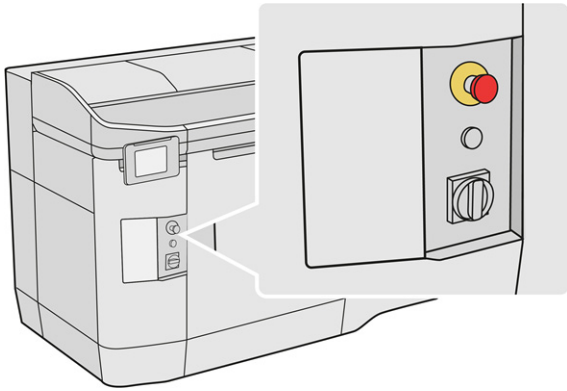

For safety reasons, access to the print zone is not permitted while printing is in progress. Let the printer cool down before touching anything inside it.

To stop the equipment completely, turn it off.

Front panel

The front panel is a touch-sensitive screen with a graphical user interface. There is a front panel on the front left of the printer and another on the front right of the processing station.

The front panel gives you complete control of your printer and processing station: from the front panel, you can view information about the device, change device settings, monitor device status, and perform tasks such as supplies replacement and calibrations. The front panel displays alerts (warning and error messages) when necessary.

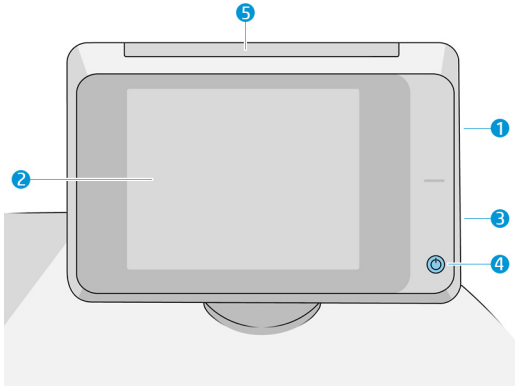

It includes the following components:

1. A Hi-Speed USB host port, intended for connecting a USB flash drive, which can provide firmware update files to the printer.
2. The front panel itself: an 8 inch, full-color, touch-sensitive screen with a graphical user interface.
3. The loudspeaker.
4. The power key, which is illuminated when the printer is on. It flashes when the printer is in sleep mode.
5. The beacon.

The front panel has a large central area to display dynamic information and icons. On the left and right sides you can see up to four fixed icons at different times. Normally they are not all displayed at the same time.

Left and right fixed icons

- Tap to return to the home screen.
- Tap to view help about the current screen.
- Tap to go back to the previous screen. This does not discard any changes made in the current screen.
- Tap to cancel the current process.

Home screens

There are two top-level screens that you can move between by sliding your finger across the screen, or tapping the appropriate button at the bottom of the screen:

- The first main screen provides direct access to the most important functions.

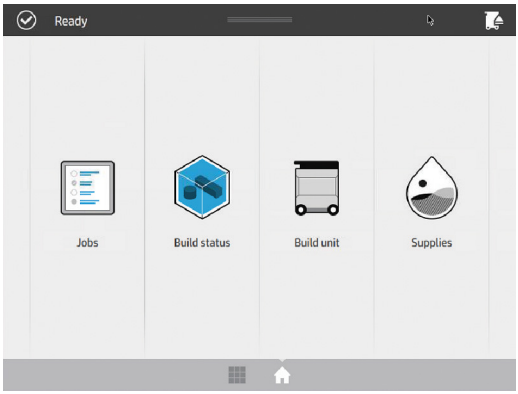

- The all-app screen displays a list of all available apps.

System errors

The system may occasionally display a system error, consisting of a numerical code of 12 digits followed by the recommended action that you should take.

In most cases you will be asked to restart the equipment. When the printer or processing station starts, it can diagnose the issue better and may be able to fix it automatically. If the problem persists after restarting, contact your support representative and be

ready to give the numerical code from the error message. If the error message contains some other recommended action, follow the instructions.

Power specifications

Configuration 1: 380–415 V line-to-line three-phase configuration

Printer specifications

Number of power lines	3 lines + N + PE
Input voltage (line to line)	380–415 V~ (±10%)
Input voltage (line to neutral)	220–240 V~ (±10%)
Input frequency	50/60 Hz
Power consumption (typical)	15 kW
Maximum load current (per phase)	50 A

Branch circuit breaker specifications

	4 poles, 50/60 A

Power cable specifications

Configuration	3 lines + N + PE
Minimum cross-sectional area	16 mm² (0,63 in²) or 6 AWG
Terminals	Ferrule terminals, except the PE terminal, which uses the M10 ring type
External diameter range	18.0–32.0 mm (0,71–1,26 in)

Configuration 2: 200–240 V line-to-line three-phase configuration

Printer specifications

Number of power lines	3 lines + PE
Input voltage (line to line)	200–240V (±10%)
Input frequency	50/60 Hz
Power consumption (typical)	15 kW
Maximum load current (per phase)	80 A

Branch circuit breaker specifications

	3 poles, 80/100 A

Power cable specifications

Configuration	3 lines + PE
Minimum cross-sectional area	35 mm² (1,38 in²) or 2 AWG

Power cable specifications (continued)

Terminals	Ferrule terminals, except the PE terminal, which uses the M10 ring type
External diameter range	18.0–32.0 mm (0,71–1,26 in)